ANNUAL PROGRESS AND SERVICE REPORT
JUNE 30, 2013

Submitted to:

Administration for Children and Families

U.S. Department of Health and Human Services

By:

Arkansas Department of Human Services

Division of Children and Family Services

P.O. Box 1437, Slot S565

Little Rock, Arkansas 72203

Table of Contents

Summary…….……1

The Division Operational Structure…….2

Consultation of Involvement Stakeholders…….….3

Service Descriptions: Status for 2013…….……...15

Child and Family Services Review Results and Program Improvemententent……..…18

Program Strategy Plan: 4th year……86

QSPR Process and Results……..…..178

Continuous Quality Improvement (CQI)……..181

Child Welfare Waiver Demonstration Activities……..200

CAPTA reporting……. ……204

Differential Response……212

Foster Care……214

Foster Care Recruitment Plan……215

Health Care Services…….……228

Services for Children under age 5…….…….....235

Adoptions …….....…….....241

Adoption Recruitment Plan ……..…….244

Disaster Plan…….....246

Table of Contents

Workforce Demographic Chart……..….....248

Training Strategy Update……...……...254

Technical Assistance Plan…….....287

Evaluation and Technical Assistance FY 2013……..……...288

Tribal Coordination/Consultation……..……....290

Arkansas Child Death Review……...292

Greatest Risk Population……293

Criminal Background Checks…….294

Transitional Services ……....….……294

Monthly Caseworker Visits…….……309

Attachment Listing……..312

ARKANSAS AT A GLANCE

The overall population in Arkansas was estimated at 2, 949,131 at the time of the U.S. Census in 2012 an increase of 1.1 percentage points from 2010. Children under five years of age comprised 6.7 percent of the population as of 2011, whereas 24.2 percent of the population was under the age of 18. 80.1 percent of the population is white, while another 15.6 percent of the population is black. More than six percent of the population identify themselves as being of Hispanic or Latino origin. In 2011 the median household income was $40,149 annually.

DCFS is a division within the Arkansas Department of Human Services (DHS). DHS is the largest state agency with more than 7,500 employees working in all 75 counties. Every county has at least one local county office where citizens can apply for any of the services offered by the Department. Some counties, depending on their size, have more than one office. DHS employees work in ten divisions and five support offices to provide services to citizens of the state. DHS provides services to more than 1.2 million Arkansans each year.

THE DIVISION OF CHILDREN AND FAMILY SERVICES

DCFS is the designated state agency to administer and supervise all child welfare services (Titles IV-B and IV-E of the Social Security Act), including child abuse and neglect prevention, protective, foster care, and adoptive programs. The State's child welfare system investigated 35,743 reports of child maltreatment. DCFS managed 12, 498 family cases with 29,282 children involved during SFY 2012. This includes protective and supportive services cases. In addition there were a total of 7,739 children at any time in foster care with 3,997 foster children in care at the end of SFY 2012. The Division is in compliance with Titles VI and VII of the Civil Rights Act and operates, manages, and delivers services without regard to race, color, religion, sex, age, national origin, mental or physical disability, veteran status, political affiliation or belief.

The Division's mission statement is as follows:

Our mission is to keep children safe and help families. DCFS will respectfully engage families and youth and use community-based services and supports to assist parents in successfully caring for their children. We will focus on the safety, permanency and well-being for all children and youth.

The Division's Practice Model goals include:

- Safely keep children with their families.
- Enhance well-being in all of our practice with families.
- Ensure foster care and other placements support goals of permanency.
- Use permanent placement with relatives or other adults, when reunification is not possible, who have a close relationship to the child or children (preferred permanency option).
- Ensure adoptions, when that is the best permanency option, are timely, well-supported and lifelong.
- Ensure youth have access to an array of resources to help achieve successful transition to adulthood.

OPERATIONAL STRUCTURE

The DCFS Director manages and has administrative responsibilities for the Division. The Director is also an active member of the Child Welfare Agency Review Board and the Child Placement Advisory Committee. An Assistant Director oversees each of these operational subdivisions within the Division: the Office of Community Services, and the Office of Finance and Administrative Support.

DCFS is comprised of the following program areas, supervised by the Division Director: Prevention Support, Specialized Placement, Policy, Professional Development, Foster Care, Adoptions, Planning, Mental Health, and Transitional Services. Together, these units are responsible for the provision of administrative and programmatic support for the state's network of child welfare services as well as short- and long-term planning and policy development.

OFFICE OF FINANCE AND ADMINISTRATIVE SUPPORT

The Office of Finance and Administrative Support provides administrative and management support to DCFS through personnel administration, budget monitoring, resource control, and contract administration. The Office includes the following units: Personnel, Contracts, Financial Management, Eligibility, Criminal Records, Central Registry, and Information Technology.

OFFICE OF COMMUNITY SERVICES

The Office of Community Services provides administrative leadership and guidance to DCFS field staff throughout all 75 counties within the state. The counties are divided into 10 geographic service areas, each with an Area Director. The Assistant Director of Community Services directly supervises the 10 Area Directors, administers the Interstate Compact for the Placement of Children Unit, Child Protective Services, and Vehicle Safety Program.

The major federal laws governing service delivery, as amended, are:

- Civil Rights Act: Titles 6, 7, and 9.
- Rehabilitation Act: Sections 503, 504
- Americans with Disabilities Act: Title II
- Social Security Act Titles:
- IV-A Temporary Assistance to Needy Families (TANF)
- IV-B Child Welfare Services
- IV-E Foster Care and Adoption Assistance
- XIX Medical Services
- XX Social Services Block Grant

Public Laws

- 93-207 Child Abuse and Neglect
- 94-142 Handicapped Children Act
- 96-272 Adoption Assistance and Child Welfare Act of 1980
- 96-273 105-89 Adoption and Safe Families Act of 1997
- 110-351 Fostering Connections Act of 2008

Consultation and Involvement of Stakeholders

The Division continues to have strong professional relationships with many groups that share our common goal of helping and supporting families. The Division continues to develop new partnerships with groups as we become more creative in assessing the needs of families and search for supports that will best meet their needs in their own communities.

In 2008 as a result of our CFSR, the Division was in substantial conformity with the systemic factor of Agency Responsiveness to the Community. All staff at all levels recognizes and values the importance of strong partnerships in serving children and families of Arkansas. No one agency or individual can support and ensure services that families need alone. It truly takes a team of folks and communities to meet the needs of families.

The Division strives to consistently engage in ongoing consultation with key stakeholders and obtain and use their input regarding goals and objectives for our CFSP.

The Division establishes key committees who then have varied stakeholders involved to assess and assist with the development and implementation of goals and objectives of not only our CFSP, but also the Program Improvement Plan (PIP). These committees often break out in subcommittees to focus in on particular areas. Although this is an area that we continual work on and are in conformity with, it is also an area where we intend to develop more. Our PIP and CFSP goals and objectives include many strategies that involve more partnerships and community involvement than ever before. It challenges us to improve in an area where we have had some success. Our goal is to open even more opportunities for our families as well as our own professional development. This would provide optimum accessibility and availability of services that are individualized to meet the individual need of families.

Some of our key partners in assessing and developing the CFSP, PIP and other strategic planning include:

Court Improvement/Administrative (CIP)/Administration for the Courts (AOC): DCFS has a good partnership with the Court Improvement staff in the Administrative Office of the Courts, and have participated in meetings, training, and planning retreats. CIP has been involved in the division program improvement planning. There is a monthly meeting at the executive level that meets to problem solve and determine how to improve outcomes with children and families. The division plans to continue this collaboration in the future by ensuring that they are invited and participate in future Child and Family Services Reviews and Program Improvement Plan follow ups. AOC continues to be invited to participate and give input on the DCFS Advisory Board. AOC has invited DCFS to participate in the development of the CIP strategic plan as well as implementation of the training and data technology grants. DCFS and the Administrative Office of the Courts (AOC) are engaged in a project to share client information of mutual clients among each system. As part of the information share, scanned court documents entered in the AOC information system, called DNet (Dependent Neglect) are now available as a pilot in CHRIS. The DNet Court Documents link is on the Court Hearing Detail screen so staff can view the

actual Court Order, Admitted Documents, and Shared Documents. There are 7 pilot counties testing this new access. They are: Pulaski, Sebastian, Washington, Benton, Carroll, Lonoke, and Miller. In May 2013, representatives from DCFS and AOC attended a forum sponsored by the National Resource Center for Child welfare data and technology to assist in collaborative efforts for CQI. As a result of this meeting two AOC staff (their Data Specialist and Court Improvement Coordinator) attend the DCFS Permanency Team meetings. AOC also participated in the entrance and exit conference of the IV-E audit debriefings**.**

- **Arkansas Commission on Child Abuse, Rape, and Domestic Violence**: In collaboration with the Arkansas Commission on Child Abuse, Rape and Domestic Violence, the Child Abuse Committee works with state partners to prevent child abuse and neglect. The committee members consist of agencies and groups representing Law Enforcement, Multidisciplinary Teams, Education, Mental Health, Judicial and other professional groups. This team has representatives that have participated on the Differential Response Committees. The Commission also implemented online mandated reporting training.
- **Citizen Review Panels**: The Citizen Review Panels (CRP) operate in Carroll, Jefferson and Ouachita Counties, reviews child maltreatment cases and the State Plan. The Panels make recommendations and works with the local County Offices. Panels in Carroll and Ouachita Counties continue to meet and make recommendations. Agency did not RFP for Citizens Review Panels this fiscal year. The DCFS Prevention Support manager is in the process of contacting the current director of the Family Resource Center located in the delta part of AR about the development of a CRP in this area of the state. Review of current CRP's show a need for CRP representation in the delta area which has a higher poverty rate, higher crime and violence and limited resources. If the Family Resource Center agrees to the development of a CRP, a purchase order will be put in place no later than October 31st to establish the 3rd CRP. If they decline, then the DCFS Prevention Support Manager will seek CRP's in either Pulaski or Craighead Co. to establish one no later than December 31st.
- **Arkansas Legislative Task Force on Abused and Neglected Children**: The Arkansas Legislative Task Force on Abused and Neglected Children, created by the Eighty-Fifth General Assembly during the Regular Session of 2005, was formed to examine how the State responds to child abuse and neglect. Members of the task force include representatives from government, law enforcement, child advocacy agencies, and medical professionals. The Task Force on Abused and Neglected Children has been placed on hold until a new Legislative chair and co-chair can be elected. Sen. Percy Malone served as the Chair of the committee and Rep. Linda Tyler served as the co-chair. Due to term limits, neither member is serving as chairperson. According to Act 1035 of 2009, the task force cannot elect a chair until the first meeting, after session. The committee will resume once a new chair and co-chair is selected.

- **Arkansas Child Death Review Panel**: The Arkansas Infant and Child Death Review panel was designed to improve the response to infant and child fatalities, provide accurate information on how and why Arkansas children are dying, and to ultimately reduce the number of preventable infant and child deaths by establishing an effective review and standardized data collection system for all un expected infant and child deaths. The committee members consist of agencies and groups representing Law Enforcement, Multidisciplinary Teams, medical professionals, Judicial and other professional groups.
- **Office of Alcohol and Drug Abuse Prevention (ADAP):** ADAP no longer exists as a unique office within the DHS Division of Behavioral Health Services (DBHS); however, the services that ADAP provided are still offered by DBHS. DCFS continues to collaborate with the Division of Behavioral Health Services in securing services for our clients with their ADAP funded facilities. There has been some problems however, DBHS has coordinated closely with DCFS to make sure client receive needed services
- **Arkansas System Improvement Project (ARSIP)**: ARSIP is advised by the Children and Youth with Special Health Care Needs (CYSHCN) Consortium and funded by a HRSA D70 Grant. The Arkansas Children and youth with Special Health Care Needs Strategic Plan has been finalized. The mission of this strategic plan is to improve the community-based and integrated system of health care for children and youth with special health care needs (CYSHCN) so that ALL CYSHCN and their families in Arkansas, with the help of professionals, will achieve optimal life and health outcomes by ensuring timely access to health services and supports.
- **AR Collaboration for Maltreated Children's Care**: This project seeks to improve access to high-quality child care for foster children. It brings together leaders from the early child care and child welfare systems along with other experts on children's well-being to review existing policies of both agencies. Funded project staff has conducted qualitative interviews with stakeholders such as infant and child mental health providers, Part C early interventionists, court officers, child welfare workers, early child care providers, and other collateral professionals. These interviews addressed the status of the current systems as well as the stakeholders' knowledge of child development and the impact child maltreatment has on child development. From these data sources, the project team is evaluating options for change, developing proposed changes, and supporting representatives from child welfare and early child care in implementing policy (or potentially other systemic) changes. Offerings of the Building Better Bridges training developed through this collaboration, began in December 2012 and will continue until summer 2013. This training provides an overview of the impact of child abuse and neglect on brain development as well as the positive impact that high quality child care can have on children involved in the child welfare system. It has been provided to DCFS staff as well as child care providers across the state. This project also aims to leverage the Arkansas Better Beginnings initiative to raise the number of credentialed providers and increase statewide access to early

child care for foster children (the project priority) and all children in Arkansas (a valuable side benefit).

- **Governor's Interagency Council on Early Intervention (ICC):** Prevention Support CPS Unit Program Manager serves as proxy for the DCFS Director. Membership of this committee consist of other DHS agencies, the Dept. of Education, Parents, Provider Vendors, a Legislator, Dept. of Insurance, and a physician from AR Children's Hospital. DCFS continues to serve on this committee

- **Social-Emotional Workgroup**: DCFS participates in the Social-Emotional Workgroup, which is a part of the Arkansas Early Childhood Comprehensive Systems (AECCS) Initiative lead by the Division of Early Child Care and Early Childhood Education. This workgroup focuses on the importance of the social and emotional health of young children and it also highlights factors that may be present with their caretakers. Each year the Social-Emotional Workgroup identifies an area of focus, such as maternal depression, and the group completes projects in support of the specified focal point. DCFS provides child welfare related information to the workgroup and it also allows for public awareness presentations to be made to DCFS staff. The DCFS System of Care Director represents DCFS on the AECCS Social-Emotional Workgroup.

- **MPCWIC (Mountains and Plains Child Welfare Implementation Center)**: AR CIRCLES (MPCWIC) Stakeholder workgroups completed the development of the Supervisory Improvement Strategic Plan and presented it to Executive Staff in August 2012. The plan resulted in the development of 8 Implementation Workgroups. Five of these workgroups began implementation efforts in September/October 2012. These workgroups are: 1) Supervisory Practice Model Workgroup; 2) Hiring Workgroup; 3) Communication Workgroup; 4) Staff Appreciation & Recognition Workgroup; and 5) Networking Workgroup. The Training Coordinator with PDU is serving as a co-chair on the Hiring Workgroup and the PDU Administrator is a co-chair for the Supervisory Practice Model Workgroup. The workgroup meetings continue to follow a structured process designed to promote an understanding and use of implementation science. Through technical support from the MPCWIC consultants, the project team provides ongoing support to the workgroups through attendance, resource sharing, and, in the case of the Supervisory Practice Model Workgroup, a national consultant to help facilitate the workgroup process/product. Products (to date) from the workgroup efforts include: Supervisory Practice Model and an AR CIRCLES communication plan. The Supervisory Practice Model aligns with the Division's Practice Model Goals and Principles by targeting all levels of supervision and supporting the development of consistent quality in supervisory practices. It is organized using 10 primary areas of supervision. For each area, it then identifies behavioral markers of quality supervision and provides critical thinking questions to help supervisors and managers assess how their practices reflect the markers. Finally, it lists outcomes that result when the identified markers are put into practice on a consistent basis. This Model was introduced to Area Directors and Executive Staff in December 2012 and to field and Central

Office Managers in January 2013. The Communication Workgroup has developed a communication plan designed to keep division staff updated on the AR CIRCLES project efforts. The division implemented Phase II of Learning Circles (LCs) in November 2012. This phase expanded participation by including at least one county in each area. Area Directors also attended the two-day Facilitator Training with the expectation they would begin to facilitate LCs with their Area Supervisors in Phase III. The PDU Manager is the Learning Circle liaison and trained a portion of the Facilitator Training as a part of the project sustainability plan. Phase II also launched the use of a web-based Learning Circle tool. This tool, developed by UAF, supports communication across learning circles and is designed to help support future learning circle and strategic plan implementation efforts.

- **Division of Behavioral Health Services (DBHS)/AR System of Care**:

  The DHS Division of Behavioral Health Services is the lead DHS Agency for the Arkansas System of Care (SOC) and it provides oversight for SOC activity. The AR SOC is a broad array of services and supports that help build meaningful partnerships with families and youth. Criteria for the AR SOC include being at high risk of out of home placement, multi-agency involvement, and behavioral health concerns; therefore, DCFS-involved children are a priority population for the AR SOC. DCFS staff is involved with implementation of the AR SOC at both the state and local levels. DBHS SOC staff and DCFS administration meet regularly to discuss trends and needs of the AR SOC.

  DCFS continues to collaborate with the DBHS in securing services for our clients with their ADAP funded facilities. DCFS no longer pays for drug screens. The ADAP funded facilities provide this service. There have been some problems, however, DBHS has coordinated closely with DCFS to make sure client receive needed services.

- **Project PLAY (Positive Learning for Arkansas' Youngest):** Project PLAY is an Early Childhood Mental Health Consultation (ECHMC) program funded by the DHS Division of Child Care and Early Childhood Education (DCCECE) in collaboration with the UAMS Department of Family and Preventive Medicine. Project PLAY connects childcare programs with free Early Childhood Mental Health Consultation throughout Arkansas. In July 2011, Project PLAY added a program area specifically for children in foster care that strives to increase the percentage of children in quality child care, to decrease switches in child care placement, and to improve communication between important grown-ups caring for children in DCFS custody. Project PLAY staff have presented information about its program to each of the DCFS areas. A "Child Care & Child Welfare Partnership Toolkit" has been developed by UAMS and it is currently being used by childcare providers and DCFS staff.

- **CASSP (Child and Adolescent Service System Program):** The Child and Adolescent Service System Program (CASSP) focuses on the needs of interagency collaboration for seriously emotionally disturbed (SED) children. CASSP is part of the Arkansas SOC and is designed to be child-centered, family-

centered, and community-based. The statewide CASSP Coordinating Council (the Council) and Regional Planning Teams carry out the mission of CASSP and DCFS is represented on each. During SFY 2012, DCFS worked with the Council to develop a DBHS Best Practice Guideline for Continuing Wraparound Service during out of Home Placement.

- **Therapeutic Foster Care**: Community Mental Health Centers and licensed private agencies maintain contracts with DCFS to provide this service statewide. DCFS meets once a month with providers to strengthen communication of referral and other issues. This group is known as the Foster Family Based Treatment Association (FFTA). The agenda varies, but topics mostly cover updates from SPU, proposed TFC standards, child specific recruiting, double occupancy request, FBI results, and age waivers. There is also discussion in regards to their annual institute conference and other national issues.
- **Arkansas Behavioral Health Planning Advisory Councils (ABHPAC):** DCFS is a member of the Arkansas Behavioral Health Planning Advisory Council. The council develops, evaluates, communicates ideas about behavioral health planning; prepares information for the federal Substance Abuse and Mental Health Services Block Grant Application; advises Arkansas state government concerning proposed and adopted plans affecting behavioral health services; and takes an advocacy position concerning legislation and regulations affecting behavioral health services.
- **Division of Youth Services (DYS)**: This division has partnered and developed an Interagency Agreement that has been implemented to better serve and plan for permanency of youth in foster care that are committed to DYS. Executive level and management staff from both Divisions meet at least quarterly to discuss issues, concerns, and problem solve. DCFS has an assigned liaison to coordinate between divisions.
- **Division of Adult and Aging Services-Adult Protective Services**: This is a "transitional task force" created to address youth who had been in care, "aged out" of the youth programs into the adult arena, but then became "lost in the system" or dropped out of the system altogether. The task force included staff from Adult Protective Services (APS), DBHS, DCFS, and DYS. A system of early identification was developed which outlined steps necessary to assure that youth likely to require adult services are identified and followed throughout this transition phase. In May 2013 this "transitional task force" finalized an Interagency Agreement outlining how the participating divisions – DCFS, APS, DBHS, DDS, and DYS – will work together to assure that youth likely to require adult services are identified and followed throughout this transition phase. This agreement is now in effect.
- **Division of Development Disabilities (DDS)**: DCFS has partnered and strengthening the collaboration for referral, consultation, and communication with Developmental Disabilities Division. DCFS has identified a liaison in the foster care unit to delve deeper into issues and concerns. Most recently DCFS and DDS worked together to strengthen policy and practice related to the CAPTA

requirement to refer all children under the age of three involved in a substantiated case of child maltreatment for an early intervention screening as DDS is the lead Part C agency in Arkansas. IT staff from both divisions are currently working to develop an interface between the two data systems to further streamline this referral process.

- **The Child of Arkansas Loved for a Lifetime (CALL):** Is a 501 (c) 3 organization which recruits, trains, and supports foster and adoptive homes for DCFS. There is a defined process for the establishment of CALL in each county. The DCFS and CALL partnership is guided by an MOU that is reviewed on a biannual basis. The first C.A.L.L. County was established in 2007. The second C.A.L.L. County was established in 2008 after a significant increase in the number of available foster homes from the first implementation of the CALL. The CALL became a statewide organization in 2010. Since 2007, the CALL has recruited over 600 foster and adoptive families.

  The CALL has created a county-based/statewide oversight model that has been replicated in 26 counties. These counties are: Pulaski, Lonoke/Prairie, Faulkner/Conway, Jefferson, Benton/Washington, Johnson, Sebastian/Crawford, Ouachita/Union, Garland, Izard/Sharp/Fulton, Baxter, Independence, Saline/Perry, Arkansas, Cleburne, White, Van Buren, and Craighead. There are more counties which are working toward launch of the CALL: Pope, Miller, Columbia, and Greene counties. We expect these counties to be launched in SFY 2014.
  The CALL is also supporting foster families by offering monthly support group meetings and the CALL Closet, which offers resources such as clothing or baby supplies to all approved foster parents. The CALL also co-hosted a "Walk for the Waiting" in 2013 where over 800 people attended. This was to raise funds to support the continued services of this organization and others.

  The CALL's website is http://www.thecallinarkansas.org/

- **Multi-Disciplinary Teams (MDT)**: The Arkansas Commission on Child Abuse, Rape and Domestic Violence, the Department of Human Services and the Arkansas State Police have entered into an agreement in cooperation with law enforcement agencies, prosecuting attorneys, and other appropriate agencies and individuals to implement a coordinated multidisciplinary team (MDT) approach to intervention in reports involving severe maltreatment. The parties to this agreement are committed to a cooperative, multidisciplinary team approach to severe child maltreatment investigations.

- **DCFS Advisory Board**: DCFS Director is in the process of shifting the DCFS Advisory Board to an Advocacy Council. An advocacy council would serve as more of a participating board that will lead to more support and advocacy of improved practice as well as resources to improve outcomes for children and families.

The plan is to develop a formal list of potential council members. Suggested membership would include (not limited to) representatives of: Practicing Attorney, Child Safety Center personnel, Health, Education , Judicial/AOC , Legislative, Foster Parents/Bio Parent, Youth, Clergy from other faiths outside of C.A.L.L. , Early Child Care Provider, and Philanthropic representative

Steps to reorganization to the Advocacy Council Plan:

- Develop draft charter
- Finalize membership
- Vet executive staff decisions with Deputy Director
- Once approved – extend invitation to representatives to see if they are interested
- Schedule the first Advocacy Council meeting

- **Youth Advisory Board**: AR Youth Advisory Board: Youth served by the foster care system provide representation on the Arkansas Youth Advisory Board (YAB) and are involved in the CFSR process. The members of the YAB are involved with the agency and the community as a whole. The YAB has been gaining a better understanding of Robert's Rules of Order and the Parliamentary procedures that will assist them with their advocacy efforts. The YAB provides Peer to Peer Support for other youth in care; Develops Training/Workshops/Conferences for transition aged youth; and provides guidance to DCFS staff on behalf of transition aged youth as it relates to policy, programs and normalcy.

  The YAB is incorporated in planning, policy initiatives, the annual Teen Leadership Conference and other program development efforts. These efforts include community based development within the DCFS, along with the implementation of any component that impacts or could impact the likely outcomes of youth leaving care. These youth receive Board Training from DCFS staff and other members of the community.
  These youth are engaged as partners in program improvement plans and fully communicate with the DCFS Executive Staff on a monthly basis and provide recommendations for program improvements. The YAB is a valued and involved stakeholder and assists with the agency's efforts to promote and provide the best supports and opportunities for youth making their transition from foster care to adulthood.

- **The Arkansas Pilot Court Team Project:** is a project between the DHS Division of Child Care/Early Childhood Education (DCC/ECE), the DHS Division of Children and Family Services (DCFS), and Zero to Three in Judge Joyce Warren's court located in Pulaski County.

  The Arkansas Pilot Court Team Project is based on the Zero to Three **Safe Babies** Court Teams Project. This is a systems change initiative focused on improving how the courts, child welfare agencies, and child-serving organizations work together, share information, and expedite services for young children. The local

Community Coordinator for the Arkansas Pilot Court Team Project works with Judge Warren to support local Court Team activities by facilitating coordination and collaboration among community stakeholders, scheduling Court Team meetings, and conducting follow-up activities related to Court Team goals. Through this project, alternate parent-child visit locations such as local churches have been arranged. In addition, visit coaching and a post-removal conference protocol have been established. A Parent Partners Program is also in development.

- **The Arkansas Early Childhood Comprehensive Systems (AECCS):** is administered by the DCC/ECE in partnership with the Arkansas Department of Health (ADH) to "increase the health and well-being of Arkansas's young children and their families by creating a comprehensive and coordinated early childhood system that will maximize existing early childhood investments, address critical needs and assure that children in Arkansas are healthy and ready to learn by the time they enter school." The DCFS Policy and Professional Development Administrator serves as a DCFS representative in this partnership. Additionally, the AECCS has a Social Emotional Workgroup that addresses the importance of brain development, mental health, as well as early relationships for young children. The DCFS System of Care Director represents DCFS on the AECCS Social-Emotional Workgroup**.**

- **Assuring Better Child Health Development (ABCD) III**: AR LINKS Arkansas was one of five states selected to participate in National Academy of State Health Policy's (NASHP) Assuring Better Child Health Development project. The Arkansas specific ABCD III project is entitled, Arkansas AR LINKS (Arkansas Linkages Improve Networks and Knowledge of Services). The goal of AR LINKS is to improve the state's ability to support quality, efficient linkages and services for healthy child development and build lasting policy and practice improvements. The DCFS Policy and Professional Development Administrator served on the AR LINKS Core Team**.** After nearly thirteen years the national Assuring Better Child Health and Development (ABCD) Program is coming to its conclusion. NASHP is currently finalizing a report entitled, "Measuring and Improving Care Coordination: Lessons from ABCD III," which will include information on the AR LINKS project.

- **Children Trust Fund**: We believe our support of programs and initiatives that promote positive parenting practices and encourage strong, healthy families will ensure a brighter future for all Arkansans. The Arkansas Children's Trust Fund provides a permanent funding source for the prevention of child abuse in Arkansas. Collected funds are disbursed in the form of grants to organizations or individuals that operate programs with a proven child abuse prevention component.

- **Psychiatric Hospitals and Residential Facilities:** The Behavioral Health unit provides technical assistance to psychiatric hospitals and facilities where foster children receive acute care and residential services. A weekly report is **received** from the Medicaid utilization review contractor that gives data on all foster

children admitted to acute care or psychiatric residential services. Any trends or issues noted with a specific facility are addressed. An example includes, one facility had multiple incidents of discharge medications not receiving prior approval. DCFS coordinated a series of meetings with this facility to include DMS pharmacy staff and pharmacy reviewers to improve practice. A program specialist attends staffing and utilization review at the Arkansas State Hospital to provide oversight of services and insure DCFS is highly involved in the treatment process. This practice was implemented in another psychiatric hospital when communication issues regarding foster children became problematic. An annual meeting will be scheduled beginning July 2013 with all psychiatric hospitals and residential facilities to improve communication, service provision, and coordination between agencies.

- **Local Community Mental Health Centers:** Uses an Interagency Agreement with the Community Mental Health Centers throughout the state to strengthen communication and ensure mental health services are provided to the children in foster care. The DCFS Mental Health Specialist regularly attends the Mental Health Council of Arkansas' Children's Subcommittee meetings to facilitate communication and improve services throughout the state for foster children.
- **The Infant Mortality Action Group:** part of the Natural Wonders Partnership Council (NWPC), composed of organizations that serve children, was originally convened by Arkansas Children's Hospital (ACH) to identify the health needs of the state's children and to construct a strategic plan for improving their health and quality of life. Comprised of educators, business leaders, government officials, physicians, nurses, social workers and other community advocates, the group meets regularly to review work under way to improve Arkansas children's health. Arkansas Children's Hospital has funded the information-gathering stage of the council's work. The report, created by the Natural Wonders Partnership Council, incorporates traditional indicators of health such as mortality and chronic disease rates as well as social factors that influence health including economics and education. When combined, these determinants provide a detailed examination of children's health. The infant mortality action group is led by Dr. Jennifer Dillaha. The FASD program director was asked to participate in part of the development of a state action plan to reduce infant mortality. The program goal worked on related to preventing low birth-weight and birth defects, with the strategy focus being on decreasing alcohol consumption among women of childbearing age.
- **The Statewide Suicide Prevention Initiative:** The FASD program director is part of the Division of Behavioral Health Services (DBHS) suicide prevention initiative group, which focuses not only on state wide suicide prevention but on target groups such as military and veterans – substance abuse/ mental health and suicide, LGBTQ – substance abuse and suicide, FASD prevention – and Suicide. Individuals with an FASD have a 5 times higher rate of suicide completion than the general population. So Suicide prevention is a common goal for my program and DBHS.

- **<u>The Arkansas Association for Infant Mental Health (AAIMH)</u>:** AAIMH was founded in May of 2009 (incorporated September 2009) in response to a growing interest in and concern about the healthy social and emotional development of young children in Arkansas.
  Infant Mental Health is enhanced by:
    - Supporting family/caregiver strengths and cultural values/beliefs
    - Identifying early signs of emotional and behavioral concerns
    - Providing families/caregivers with the necessary skills and tools to support health, social, and emotional development
    - Focusing on outcomes
    - Promoting successful partnerships among families/caregivers and community support systems.
- **<u>Personal Responsibility Education Program (PREP)</u>:** The FASD program director serves as a liaison for a MOA between DCFS, Department of Health, and their sub-recipient, Centers for Youth and Families, for the PREP Personal Responsibility Education Program. A program for Pulaski county youth in foster care with a goal of reducing pregnancy and birth rates among this population. PREP has two programs aimed at different age groups: 1) Making proud Choices –for children ages 11- 13; and Reducing the risk for children ages 14-19.
- **<u>The Arkansas Folic Acid Coalition:</u>** is a group of professionals from over 25 different organizations who have volunteered their time to increase awareness about the benefits of folic acid use among Arkansans. In Arkansas, 8 out of every 10,000 live births are affected by an NTD. That is 30-40 pregnancies affected by this defect each year in the state. Birth defects are the leading cause of infant mortality, accounting for more than 1 in 5 infant deaths. The FASD program director was invited to participate in this workgroup by Dr. Brad Schaefer of Arkansas Children's Hospital to provide information for the website being developed by the folic acid coalition. In addition to Folic Acid information Dr. Schaefer intends to provide other healthy pregnancy tips to avoid other preventable birth defects such as Fetal Alcohol Syndrome.
- **<u>Arkansas Legislative Task Force on Autism</u>:** Co-Chairs Senator Mary Anne Salmon and Representative Uvalde Lindsey. The Legislative Task force on Autism has addressed issues such as: Special education mediation program, insurance efforts, Arkansas Health care payment improvement initiative, educational and job training opportunities for students with developmental disabilities, discussion of higher education opportunities for students with autism, update on state's application for the Race to the Top grant, overview of the state's certification requirements for assistant behavior analyst providers, and discussions on individual education plan development.
- **<u>Partners for Inclusive Communities:</u>** This is one of the main collaborative partners from the beginning of the FASD program. Partners allow the program to host our monthly FASD task force meeting at their facility each month. They support the program by providing technical assistance on difficult cases and

consulting on IEP planning for students receiving special education services. They have also hosted family support group meeting for families living with a FASD and provide individual counseling whenever needed for families. Partners also provide FASD trainings for medical or school personnel and are an active advocate when it comes to FASD. Partners for Inclusive Communities (Partners) are Arkansas' University Center on Disabilities. Administratively located within the University of Arkansas College of Education and Health Professions, Partners is a member of the nationwide Association of University Centers on Disabilities – AUCD. Partner's Mission: To support individuals with disabilities and families of children with disabilities**,** to fully and meaningfully participate in community life, effect systems change, prevent disabilities and promote healthy lifestyles. Our Beliefs and Values: Individuals with disabilities are people first, with the same needs and desires as other people. Disability is a natural and normal part of the human experience that in no way diminishes a person's right to fully participate in all aspects of society.

- **Judicial Leadership Team:** is an collaborative effort started by Judge Warren of Pulaski County Juvenile Court to facilitate communication between the court, DCFS, CASA, OCC, and the Child and Parent Attorneys. Judge Warren schedules the meetings in her courtroom every other month at 7:30 a.m. so she can attend prior to the start of court hearings. New programs can be introduced at the meeting and issues or concerns can be raised and addressed giving an opportunity for open communication with Judge Warren to all in attendance.

- **FASD task force:** meets monthly and includes representatives from the following agencies: Pulaski County Juvenile Courts, Partners for Inclusive Communities, UAMS Departments of Family and Preventive Medicine, DHS/DCFS, Administrative Office of the Courts, Division of Child Care & Early Childhood Education, UAMS PACE team, Division of Behavioral Health, Arkansas Department of Education, Special Education, Division of Developmental Disabilities Part C, Arkansas Foundation for Medical Care, Arkansas Zero to Three Court Team, March of Dimes, Adoptive Parent Representative. The group has served as an advisory board to the FASD program and has set goals of promoting FASD awareness in Arkansas such as FAS awareness Day, passing warning sign legislation in Arkansas, supporting the FASD medical luncheon hosted by group member the Zero to three Court team program, and supporting and promoting the FASD conference hosted by the ARC of Arkansas.

- **Inter-Divisional Staffings:** The focus is on complex cases and occurs 3 times a month. This staffing includes representatives from other DHS Divisions, including Youth Services, Medicaid, Behavioral Health, Developmental Disabilities, and other stakeholders specific to the child such as CASA, attorney ad litem, etc. In the past year, an additional staffing was added to review dual custody cases to insure that best practices in service provision and collaboration are occurring within both divisions. Monthly reports are produced by DCFS Areas, detailing completion of recommendations. Practice issues identified are

addressed, as necessary, with County Supervisors, Area Directors, and family service supervisors.

DCFS plans to continue to build upon our community partnerships and build the service array necessary to meet the needs of our population for individualized and community based services and supports focused on safety, permanency, and well-being. In order to have a true child and family services continuum, we must acknowledge that one entity cannot be responsible for meeting the needs of children and families and that it is through true collaboration and partnerships that we coordinate and integrate into other services to prevent child abuse and neglect as well as achieve positive outcomes for children and families who are within the child welfare system. Over the next five years, it is anticipated that our formal and informal partnerships will grow and strengthen to work together to achieve positive outcomes for children and families of Arkansas.

Service Descriptions: Status for FY2013

The Division delivers services directly and purchases services from private and public agencies, universities and individuals, using state and federal funds. Programs and services of other Divisions within the Department of Human Services (DHS) are also available to clients of DCFS. Delivery of services is coordinated with other Divisions administering TEA/TANF Medicaid, Food Stamps, Social Services Block Grant, and other federal entitlement programs. DCFS continues to work with the state Community-Based Child Abuse Prevention Program (CBCAP) State Lead Agency funded under Title II of CAPTA to develop child abuse prevention programs, in addition to the ones DCFS purchases.

DCFS staff provides child maltreatment investigations, family assessment, case planning, referral, and case management services. If a child cannot be maintained safely in their own home, DCFS will petition the court for custody and place the child in an approved foster home or licensed residential facility.

Child Welfare Services are a broad category of services to children and their families.

These services include a variety of services described below:

- **Prevention/Support:** The Division primarily manages prevention/support through community based contracts, communication strategies, and opportunities for families to request voluntary or Supportive Services.
- **Intervention and Treatment:** The Division offers several services to children and families. Including Intensive Family Services, Anger Management, Parenting Education, Interpreter Services, Psychological Evaluations, Respite Care, and Counseling to safely maintain children in their own home.

  In addition, Arkansas has implemented a Differential Response program dependent on specific allegations. This will be a part of our strategy to strengthen prevention of child abuse and neglect.
- **Child Protective Services:** When an investigation is determined to be true, DCFS opens a protective service case and works with the child(ren) and family in the

home or, if the abuse is severe, DCFS places the child in a safe and home-like setting. DCFS will also provide services to the child(ren) and family in order to support a continuous, safe and stable living environment, promote family autonomy, strengthen family life where possible, and promote the reunification of the child with the parent, guardian or custodian, when appropriate

- **Foster Care Services:** The Division cares for children who cannot remain in their biological/legal parents' homes by locating temporary placements in least restrictive environments, usually approved foster homes. These children, who are usually removed from their families due to alleged abuse or neglect, are cared for while biological families complete the steps put into place by the courts to bring their children home. Plans are immediately put in place for the children, including reunification with biological parents, placement with relatives or significant people in their lives, adoption, and/or other permanent living arrangements. Permanency is paramount to these plans. The Division works with the families to offer all services in conjunction with court orders in order to reunify the family and place the child back in their home.

- **Subsidized Guardianship Program:** For children for whom a permanency goal of guardianship with a relative has been established, the Division offers a federal (title IV-E) Subsidized Guardianship Program to further promote permanency for those children (provided subsidized guardianship eligibility criteria are met). Any non-IV-E eligible child may enter into a subsidized guardianship supported by Arkansas State General Revenue if the Department determines that adequate funding is available and all other Subsidized Guardianship Program criteria are met. The monthly subsidized guardianship payment shall be used to help relative guardian(s) defray some costs of caring for the child's needs. During permanency planning staffings guardianship should be explored as a potential permanency option. If it is determined at the permanency planning hearing that a guardianship arrangement with relatives is in the child's best interest and the child's permanency goal is changed to legal guardianship, the Division shall then determine if a specific guardianship arrangement may be supported by a subsidy through the Division's Subsidized Guardianship Program. Only relative guardians may apply for a guardianship subsidy. Relative is defined as a person within the fifth degree of kinship by virtue of blood or adoption (A.C.A. § 9-28-108). The fifth degree is calculated according to the child.

  When it is in the best interest of each of the children, the Division shall attempt to place siblings together in the same guardianship arrangement. Siblings may be related by biological, marital, or legal ties. A child who meets the eligibility criteria for a subsidized guardianship will qualify his or her siblings for subsidized guardianship as well provided the siblings are placed in the same relative home. The child who qualifies for a guardianship subsidy does not necessarily have to be placed at the same time as his or her siblings in the relative home. The guardianships for each child in the same relative home do not need to be finalized in any particular sequence.

  AR has approved five Subsidized Guardianship to date. The Permanency Specialist review each referral closely for the documentation, conducts a case

review, and a consultation with the worker/supervisor. The challenge in regards to these referrals is assuring that the documentation that clearly reflects the ruling out of reunification and adoption is clear.

- **Transitional and Independent Living Services:** Each child in DHS/DCFS custody, age fourteen or older, in care for 30 days or more shall be provided with opportunities for instruction for development of basic life skills. Each child, beginning at 14 but no later than age sixteen shall be assessed every six (6) months to determine the progress in acquiring basic life skills as well as planning for transition to adulthood until age 18 or as competency is achieved in the assessment score (90% or above). Services identified in the assessment to help the child achieve independence will be provided directly by staff, foster parents or placement staff, through contract or through arrangement by staff. The Chafee Foster Care Independence Program provides service to youth in foster care that are often unavailable or unfunded through other program funds such as Title IV-E-Foster Care. Services provided are those supports and services that will enhance the likely of a transition to a successful adulthood. CFCIP also serves those youth adopted after age 16 and youth who are eligible for the Subsidized Guardianship. CFCIP also provides services to youth leaving care after age 18.
- **Adoption:** All children have a right to a safe, permanent family. The Division of Children and Family Services shall develop and implement permanency plans for children. One option is to terminate parental rights to a child for adoptive placement, when it has been determined that reunification with the family is not a viable option. The court may consider a petition to terminate parental rights (TPR) if the court finds that there is an appropriate permanency placement plan for the child. It is not required that a permanency planning hearing be held as a prerequisite to the filing of a petition to terminate parental rights, or as a prerequisite to the court considering a petition to terminate parental rights.

Purchased Services include the following:

- Statewide comprehensive medical examinations for foster children through a contract with the University of Arkansas Medical School's Department of Pediatrics
- Assessment, diagnosis and therapy services for adolescent sexual offenders through a contract with the University of Arkansas Medical School's Department of Pediatrics
- Individual, family, and group therapy and various individual and group counseling services from private agencies, mental health associations, or private practitioners throughout the state
- Professional language interpreters statewide when serving families that do not speak English
- Sign Language Interpreter services
- Emergency shelters for children and teens
- Purchased services to children in the custody and care of DCFS include therapeutic foster home programs, psychiatric residential treatment, comprehensive residential treatment, residential treatment, respite care, health

services, and independent living
- Respite care
- Therapeutic groups for foster and adopted teens
- Adoption and foster home approval activities
    - Training for DCFS staff, prospective adoptive and foster parents, and current/ active adoptive and foster parents

Additional Adoption Promotion and Support Services include:

- In-home consultation visits with prospective adoptive families
- Adoption home studies
- Adoption summaries on waiting children

Purchased Services Decision Making Process: Overview

The RFP is issued to seek proposals from qualified organizations to provide serves. The respondents submit proposals in two separate parts, technical and cost. The proposals are then evaluated in four phases. Phase 1 is mandatory. Proposals must pass the phase before being moved forward for further review. Phase 2 is the evaluation of the technical proposal. Phase 3 is evaluation of the cost proposal. Phase 4 is ranking of the proposals after the final scores for each respondent for the technical and cost proposals are added together for a final overall score. The highest number of points is ranked number 1. The other proposals are ranked in descending order based on their number of points. A contract is awarded to the respondent whose proposal is determined to be most advantageous to DCFS and DHS based on the selection criteria, not necessarily the lowest price.

In the technical section, the respondents must demonstrate how they are able to effectively and efficiently deliver the service.

How these agencies are community based:

Respondents operate community based businesses, serving designated client populations. Moreover, they must be listed as being in good standing with the Secretary of State's office.

Child and Family Services Review Results and Program Improvement Plan

Arkansas 2nd Round of CFSR was conducted in January 2008. The Final report was received October 2008 and our PIP was submitted in January and is pending approval.

Despite a successful completion of a Program Improvement Plan after the 1st CFSR Round, it was obvious that Arkansas plan was not a systemic change for effective and ongoing improvement.

Safety Outcome 1: Children are first and foremost protected from abuse and neglect.

Status: Not in Substantial Conformity

The outcome was determined to be substantially achieved in 76.9% of the cases reviewed

Safety Outcome 2: Children are safely maintained in their own homes wherever possible and appropriate.

Status: Not in Substantial Conformity

The outcome was determined to be substantially achieved in 58.5 % of the cases reviewed

Permanency Outcome 1: Children have permanency and stability in their living situations

Status: Not in Substantial Conformity

The outcome was determined to be substantially achieved in 41.0% of the cases reviewed

Permanency Outcome 2: The continuity of family relationships and connects is preserved for children

Status: Not in Substantial Conformity

The outcome was determined to be substantially achieved in 53.9% of the cases reviewed

Well Being Outcome 1: Families have enhanced capacity to provide for the children's needs

Status: Not in Substantial Conformity

The outcome was determined to be substantially achieved in 27.7% of the cases reviewed

Well Being Outcome 2: Children receive appropriate services to meet their educational needs

Status: not in Substantial Conformity

The outcome was determined to be substantially achieve in 71% of the cases reviewed

Well Being Outcome 3: Children receive adequate services to meet their physical and mental health needs

Status: Not in Substantial Conformity

The outcome was determined to be substantially achieved in 62.3% of the cases reviewed.

Arkansas Program Improvement Plan after the Final report established four broad strategies to make significant and systemic changes to improve outcomes for children and families. They are:

1. Develop and Implement a Sustainable Practice Model to ensure consistent and appropriate services are provided to children and families that lead to positive outcomes
2. Establish a System for Effective Communication, Professional Development, and Organizational change to build a child welfare system that keeps children safe and help families; respectfully engages families and youth and uses community based services and supports to assist parents in successfully caring for their children. The focus will be on the safety, permanency, and well-being for all children and youth
3. Build Arkansas Service Array to have available, appropriated, and accessible services to children and families based on their identified needs

4. Develop an Effective Quality Assurance and practice improvement process to ensure the consistency of quality practice and the flexibility to improve based on the data gathered through our Quality Assurance processes

Program Strategy Plan

Goals and Objectives

Goal: Develop, Implement, and Monitor a Statewide Practice Model to ensure the most appropriate services are provided to children and families in a consistent manner that lead to positive outcomes.			
FIRST YEAR	**TARGET DATE**	**STATUS ACCOMPLISHMENT/PROGRESS**	**REVISION NEEDED**
Design a practice model change strategy	9/30/09	a) Outline for casework process completed-Flow chart of child journey through AR DCFS b) Meeting map strategy implemented and ongoing tool to track meeting opportunities c) Continuing to engage internal and external stakeholders	

Goal: Develop, Implement, and Monitor a Statewide Practice Model to ensure the most appropriate services are provided to children and families in a consistent manner that lead to positive outcomes.			
FIRST YEAR	**TARGET DATE**	**STATUS ACCOMPLISHMENT/PROGRESS**	**REVISION NEEDED**
Convene PIP Practice Model Workgroup	3/30/10	The advisory board has been serving as stakeholder group. The practice model framework is developed which includes goals and principles.	
Implement strategy for Information Sessions to gather information and create ownership	6/30/10	The practice model consultation and tools were developed so that DCFS could begin the messaging and feedback process for development of	

		practice model. Beginning July1,2009 and continuing to present time consultations in field were conducted to gather feedback to develop practice model framework and continue to educate and develop leadership of Area Directors and Supervisors during meeting, case reviews, and consultations	
Review Protocol for CACD/DCFS/LLE relationships	6/30/10	CPS manager and field stakeholders reviewed the roles and responsibilities of each position and discussed needed change. DCFS reviewed the CACD agreement and shared practice model. Executive staff meets monthly with CACD to discuss and problem solve issues of conflict related to policy and practice. Reviewed protocol and tools and guides used for assessing safety and risk and change as needed	
Integrate NGA plan into Practice Model	6/30/10	This plan was reviewed and cross walked with the PIP so that we were operating from one primary plan.	
Transform training partnership and professional development approach	6/30/10	Intake of review and discussion of roles of training partnering with field staff and supervisory staff. Completed overview of CORE and began integrating practice model language into curriculum until review of curriculum takes place. Overview of OJT was conducted with no changes made. (This included Field Instruction/Mentoring manual)	
Goal: Develop, Implement, and Monitor a Statewide Practice Model to ensure the most appropriate services are provided to children and families in a consistent			

manner that lead to positive outcomes.			
FIRST YEAR	**TARGET DATE**	**STATUS ACCOMPLISHMENT/PROGRESS**	**REVISION NEEDED**
Transform Foster/Adopt Parent Training	6/30/10	Clarified roles and responsibilities into practice model language to include leadership response. The F/A process were reviewed for clarity as well as updating curriculum to 2010 version. The agency decided to adopt the SAFE home study process so implementation planning is in process. We have some challenges with tracking training records but continue to problem solve	
Review and Revise Policy	6/30/10	Convened a workgroup to develop framework for restructuring policy-TOC outline completed and shared for feedback. Subject matter experts have been identified and will be reviewing all policy and providing feedback.	
Strengthen the relationship with DCFS and CACD and LLE to ensure safety of children	6/30/10	CACD agreement revised monthly meeting continue to discuss and resolve issues and concerns. Random review of substantiated and unsubstantiated reports conducted to identify areas of concerns and develop training to address. The next steps with this strategy were to use the outcomes of these random reviews to assist in the development of the Investigation Training. The results of these reviews indicated that the focus of the training needed should be related to three primary	

		elements: policy focus and "refresher" training on procedures, skill improvement related to assessing safety threats and risk assessment, and the development of protection plans. Investigation training was conducted in the first quarter to address the policy and "refresher" elements identified. Structured Decision Making model was selected as the training to improve the skills of the improvement needed for assessing safety threats and risk assessment as well as improve the quality of protection plans. The SDM training is scheduled from May through July for Area Directors, supervisors, and investigators.	
Develop strategy for phase in sites for staged implementation and sustainability of practice model statewide	6/30/10	The written criteria for startup was developed and two counties identified (Saline and St. Francis) snapshot of each county developed to support decisions and initial planning development. Expansion criteria developed.	
Implement revised casework process designed strategically for Prevention/Support Services	6/30/10	Integrated practice model language in field and central office staff. Each area develops practices; implement plans to address ANI from COR, meta-analysis, and QSPR results. As different skill needs are identified, coordinate with PDU to determine training needs and scheduled training. We identified cases and analyzed the data on children entering and leaving care 30, 60, 90 days.	

Implement revised casework process designed strategically to improve investigation and safety of children	6/30/10	Revised functional to include behavioral elements and practice model language conducted SDM; and have reviewed current assessment tools and instrument for effectiveness.	
Goal: Develop, Implement, and Monitor a Statewide Practice Model to ensure the most appropriate services are provided to children and families in a consistent manner that lead to positive outcomes.			
FIRST YEAR	**TARGET DATE**	**STATUS ACCOMPLISHMENT/PROGRESS**	**REVISION NEEDED**
Implement revised casework process designed to strategically for Child protective Services to improve safety and permanency of children	6/30/10	Clarified and added behavioral and practice model language to functional job description met and trained on investigation expectations with supervisors and conducted SDM training. HZA review cases and each area developed plan for closing overdue investigations.	
Implement revised casework process designed to strategically improve outcomes of children in and out of home placements	6/30/10	Clarified and added behavioral and practice model language to functional job responses. Each area has a PIP that addresses the outcome of QSPR and Meta-analysis. Each area Director reports monthly progress and challenges. As skill needs are identified, training is considered.	
Provide safe	6/30/10	Clarified and added behavioral	

and permanent adoptions for all children needing adoption as their best permanency option		and practice model language to functional. Previous to the creation of this Flow Chart, there was not one and Adoptions were handled differently in the 10 different Areas. This Flow Chart was an attempt to ensure adoptions were handled the same statewide and that adoptive applicants would receive the same level of service no matter what part of the state they lived in. This chart will change when DCFS makes a decision and sets a timeline for changes to the home study process. Adoption staff were given information on SAFE (Structured Analysis Family Evaluation) and all foster and adoptive home studies will be conducted by Mid-South. The Adoption Field Staff are excited about the prospect of this new study process. Adoption provides monthly training to adoption staff to clarify expectations. Adoption manager works closely with adoption staff to identify systemic barriers to finalization and has developed monitoring tools, enhancing the supportive role of adoption coalition.	
Implement revised casework process designed strategically for Youth Services including National Youth Transitional	6/30/10	DCFS has identified and developed partnership with key stakeholders such as housing, education, workforce, a planning meeting was conducted and plan outlined to develop foundation for program. List of positive outcomes to expect provided DCFS had identified barriers to	

Database		youth and transitional services so that we can problem solve. DCFS has provided transition service definitions to ensure consistency. DCFS has developed CHRIS scopes for NYTD elements and overall youth survey. DCFS has had youth leadership conferences led by youth. DCFS conducted training for internal and external stakeholders.	
Develop an ongoing process for ensuring the Quality Services peer review process aligns with the practice model and federal requirements	6/30/10	The QSPR unit (part of QA) is outsourced. The tools and skills of staff were assessed. The tools are in process of being enhanced. Staff was trained on tool and was taken through practice courses.	
Goal: Develop, Implement, and Monitor a Statewide Practice Model to ensure the most appropriate services are provided to children and families in a consistent manner that lead to positive outcomes.			
FIRST YEAR	**TARGET DATE**	**STATUS ACCOMPLISHMENT/PROGRESS**	**REVISION NEEDED**
Evaluate the casework process for continuous Quality Improvement and effectiveness	6/30/10	Case reviews are conducted local, by QSPR, and by QA staff (Admin. Review and Meta-analysis) Arkansas continues to develop material and implement strategies discussed in document 67b, submitted 1st qtr. We continue to use e-mail, meeting map strategy, and phone conferences as our primary strategy to disseminate changes and other information. We continually provide the AR Practice Model	Ongoing.

		Framework and recently developed a pamphlet as supporting material. Once the communication specialist is hired, communication will be strengthened.	
Strengthen the QA process	6/30/10	Finalized the Administrative Review process and methodology and conducted the review. We transitioned the licensures unit to the Division of Child Care and Early Childhood Division. They developed training guides for licensing visits. DCFS and DCCEC have been meeting to develop a partnership with clear roles and responsibilities. DCCEC have trained all their staff on licensing of Foster Homes. DCFS have developed functional job responsibilities for resource workers that clarify expectations. DCFS has a process in place for follow-up on non-compliance	
Specify and/or identify data elements Test, and train for Decision Support system	6/30/10	Several meetings have taken place with the personnel from UAMS, and the CHRIS Technical Staff. The P.A.C.E exams are going to be scanned into the CHRIS system, and the medical recommendations screen in the system is being modified to track medical outcomes from the recommendations made by medical personnel.	
Enhance the Quality Services Peer Review	6/30/10	The QSPR process now includes a coaching session in the 2nd part of year as follow up	

Goal: Integrate DCFS practice through communication, professional development and organizational change management to build a child welfare system that keeps children safe and help families; respectfully engages families and youth and uses community-based services and supports to assist parents in successfully caring for their children. The focus will be on the safety, permanency and well-being for all children and youth.			
FIRST YEAR	**TARGET DATE**	**STATUS ACCOMPLISHMENT/PROGRESS**	**REVISION NEEDED**
Create an effective communication plan that reflects DCFS message	6/30/10	Communication plan developed and communication strategies training with Executive staff. The communication plan will include strategies to improve our messaging about the work of child welfare and reflect our practice model. This benchmark will not require ongoing reporting but will advise if stakeholders are added. The division is in process of hiring an extra help to develop the messages and tools needed and assist in developing strategies to meet varied audiences	
Continue to improve collaboration and communication between courts and DCFS to improve outcomes for children and families	6/30/10	The Director meets monthly with Ms. Tanner on legal practices and issues. Director spoke at children of court conference. She has one on one conversations with Judges as need arises. We are making progress with DNET which is data sharing.	
Implement training review in casework process to identify overall skill set	6/30/10	**DCFS has revised Family Service Worker or FSW job description/functional to include behavioral and practice model language**	

Design organizational strategies that will support and sustain the DCFS transformation process	6/30/10	Area Directors report monthly best practices and employee of month an approach with how we will assess and determine practice leaders develop DCFS receives technical assistance from Casey Family programs, NRCYD, NGA, and Children Defense Fund. DCFS personnel have been identified as practice leaders and represent all ten geographical areas of the state. Although these personnel are identified in monthly reports at "Employee of the Month," their performance has in fact been evaluated over a lengthily period of time. Many have also been identified for demonstrating "best practices" by their Area Directors, County Supervisors, and in several instances, by providers. The majority of them have been performing as both formal and informal leaders for quite some time; however, the division did not adopt a formal recognition program for top performers until November of 2009. Whether they are caseworkers, investigators, resource workers, supervisors or managers, and support personnel, these personnel have demonstrated their willingness to change the child welfare system in Arkansas, and support the principles and philosophies of our new practice model.	
Enhance worker recruitment	6/30/10	DCFS receives reports on worker and caseloads,	

strategies for effective recruitment within DCFS		turnovers, exit interview, as well as statewide trends. Director analyzes all data reports and trends when making decisions related to the assignment to the field.	
Goal: Integrate DCFS practice through communication, professional development and organizational change management to build a child welfare system that keeps children safe and help families; respectfully engages families and youth and uses community-based services and supports to assist parents in successfully caring for their children. The focus will be on the safety, permanency and well-being for all children and youth.			
FIRST YEAR	**TARGET DATE**	**STATUS ACCOMPLISHMENT/PROGRESS**	**REVISION NEEDED**
Develop strategies for Retention of workers at all levels within DCFS	6/30/10	DCFS has developed several strategies to share information-DHS share, e-mail, consultant, quarterly meeting, newsletter etc. Conduct survey with workers, youth, and foster parents and follow up on plans based on feedback	
Goal: Establish an ongoing process that identifies services gaps and implements resource development at the state and local level to address those identified gaps.			
FIRST YEAR	**TARGET DATE**	**STATUS ACCOMPLISHMENT/PROGRESS**	**REVISION NEEDED**
Design a child and family services snapshot which identifies the population served and services needed based on identified risk (to establish baseline)	6/30/10	DCFS used AFCARS and NCANDS to assess to determine statewide needs. Also in development is process to survey local communities for informed services and have available online. Stakeholders are identified.	

Conduct a statewide assessment of contracted, purchased, and free services for children and families	6/30/10	DCFS contracted with HZA to conduct evaluation on contract services. Final reports are being analyzed and meeting with providers conducted. Amended contracts will be developed based on these for July 1, 2011. We have communication with other divisions to try to avoid duplicate of services we utilize monthly reports to provide information on effectiveness of program as well as meeting with field	
Goal: Establish an ongoing process that identifies services gaps and implements resource development at the state and local level to address those identified gaps.			
FIRST YEAR	**TARGET DATE**	**STATUS ACCOMPLISHMENT/PROGRESS**	**REVISION NEEDED**
Conduct Overview sessions of the outcomes of Step 1 (Snapshot) and 2 (Assessment of contract services)	6/30/10	The meeting map strategy is used to schedule meeting and educate on child welfare and practice model.	
Increase the number of foster homes in each county to meet the individualized needs of the children including sibling groups entering care	6/30/10	After identifying report needs, they are being utilized to effectively strategize in recruitment/retention efforts. The "Current Foster Children by Latest Removal County and Placement County Summary" is used to identify the percentage of foster children who are placed outside of their originating county and area. This report allows a snapshot of the needs of each county and area, which aids in county-specific recruitment.	

		Other reports used are the "Provider Placement Preference", which determines characteristics that foster homes will accept, the "Active, Available Foster Home" report shows current numbers of homes, and the "Monthly Count of Foster Children by Age" shows trends of the age of children in foster care by county and area, which determines the types of foster homes needed. The data and trends received from the reports were used in creating county-specific recruitment plans for each area. By analyzing the trends of characteristics of current children coming into foster care, along with looking at the characteristics currently accepted by foster homes, Resource Workers are able to create strategies to recruit foster homes to meet the needs of children in foster care. The report which shows monthly foster home closures is analyzed monthly, with contact being made to ensure best practice with these homes. This aids in retention of foster homes. Using the Current Foster Children by Latest Removal County and Placement County Summary" report allows Resource Workers to see what percentages of children are being placed out of their originating county, which aids in recruitment efforts. These statistics are also used to create a sense of urgency within the community. The Recruitment/Retention Manager continues to work with Resource Workers regarding recruitment	

		plans for county and area. Resource Workers submitted their draft plans for review. Unfortunately, several of the plans did not reflect the AR Practice Model or best practice. These plans seemed to use duplicate strategies for different counties, did not build on the strengths of the individual counties, and missed key community partners. A couple of the area plans were good in that they showed individual focus on each county's strengths and challenges, identified active community partners, and were tailored to the demographics of each county. After the plans referenced in 4.6 are finalized, existing data reports, and if necessary, custom data reports will be developed and utilized in the management and tracking of the recruitment and retention of foster homes. Both successful outcomes and deficiencies will be continuously communicated to members of the Executive Staff, Area Directors, County Supervisors, and Resource Workers in order to enhance communication for this critical tasking and improve the overall effectiveness of foster home recruitment and retention. These counties include Pulaski, Lonoke, Saline, Ouachita, Faulkner/Conway (acting as 1), Sharp/Izard/Fulton (acting as 1), Crittenden, Arkansas, Crawford/Sebastian (acting as 1), White, Johnson, Jefferson, and Cleburne. There are 3 counties that are working toward launching the C.A.L.L. but are	

		not yet active. To date, over 400 foster, adoptive, and respite homes have been recruited and are either opened/approved or are in the process of approval by the C.A.L.L. Mentoring initiatives and Visitation Centers are projects also in the process of implementation by the C.A.L.L	
Develop a strategy for retention of foster parents	6/30/10	A written retention plan was developed and is being implemented. The Foster Care website was created to further positive communication with current Foster Parents and allows easy access to information on all things Foster Care. This page is updated by the Foster Care Unit, maintained by the DCFS webmaster, and is used as a mechanism to direct prospective Foster Parents to for basic information, and keep current Foster parents informed of DCFS updates, changes, resources, and upcoming events. This website is kept current with information that will help further the cause of Foster Care and the AR Practice Model. Maintain a list of Foster Parent Associations and have a plan in place to expand and support Foster Parent Association. A recognition program has been developed that will be implemented this next year	
Increase the number of adoptive homes in the state to meet the individualized needs of children	6/30/10	Data reports have been developed to better determine trends and gaps. Adoption staff analyzes data and follow up as needed. Recruitment material has been developed and is utilized	

awaiting adoptive placement			
Goal: Create a systemic approach for data management within DCFS at all levels to justify policy, procedure, and financial changes necessary based on valid data to continually improve the ability to provide the most appropriate services and supports to children and families for positive outcomes.			
FIRST YEAR	**TARGET DATE**	**STATUS ACCOMPLISHMENT/PROGRESS**	**REVISION NEEDED**
Develop improvement plan for the Quality Assurance of the QSPR process	6/30/10	DCFS contracts this with HZA and a work plan with timeline is developed. The QSPR is similar to the CFSR tool and process. Staff was trained by CFSR consultant. New QA levels by managers are in place. The training and QA process should address the interrelated reliability issues	
Feedback for practice improvements and service development	6/30/10	The QSPR results are shared with Director, Assistant Director, and Area Directors. The QSPR teams follow up in 3rd and 4th quarters of year to review and its effectiveness of PIP based on QSPR results	
Consolidate existing data reports to improve accessibility of effective management of data	6/30/10	HZA completes a Meta-analysis annually to provide this information. it is reviewed by Executive staff and Area Directors on determining ANI and problem solving	
Review and assess current process and recommend changes including	6/30/10	Priority data elements techniques were identified from CFSR finding report and Admin. Review conducted in 2009. A process for CHRIS enhancements are in place	

necessary relationship within the process for policy changes, data implications and CHRIS enhancements			

Goal: Create a systemic approach for data management within DCFS at all levels to justify policy, procedure, and financial changes necessary based on valid data to continually improve the ability to provide the most appropriate services and supports to children and families for positive outcomes.			
FIRST YEAR	**TARGET DATE**	**STATUS ACCOMPLISHMENT/PROGRESS**	**REVISION NEEDED**
Develop training on how to access reports and understand the data including the analysis of the data	6/30/10	Access to reports is simple but ensuring reports provide information can use in challenging. We have many conversations and data is used. Require to report monthly progress. Challenges and what you are doing about them in monthly report. QSPR assist in monitoring	
Conduct annual surveys that collect information in regard to client satisfaction and needed improvements for quality and practice improvement	6/30/10	Surveys have been revised to reflect more strength based and practice model language	
Goal: Develop, Implement, and Monitor a Statewide Practice Model to ensure the most appropriate services are provided to children and families in a consistent manner that lead to positive outcomes.			
SECOND YEAR	**TARGET DATE**	**STATUS ACCOMPLISHMENT/PROGRESS**	**REVISION NEEDED**
Assess and continue staged practice model change strategy	6/30/11	As we continue to work our Program improvement Plan, every activity reflects our goals and principles of the practice model. We keep our framework in front of us for review of policy, procedures, meetings, development of practice guides and other resources. As we move forward, and “go deeper”	Requirement met

		into implementation, we will be assessing the goals and principles and assuring that they continue to align with the standard of practice and vision of the Division.	
Goal: Develop, Implement, and Monitor a Statewide Practice Model to ensure the most appropriate services are provided to children and families in a consistent manner that lead to positive outcomes.			
SECOND YEAR	**TARGET DATE**	**STATUS ACCOMPLISHMENT/PROGRESS**	**REVISION NEEDED**
Continue to convene PIP Practice Model Workgroup (Advisory Board)	6/30/11	The Advisory Board continues to meet periodically throughout the year. Each agenda includes discussion of changes, initiatives, consideration of changes in policy, practices, or new implementation of programs which includes consideration and discussion on how this aligns with the goals and principles of our practice model.	Complete with 8th Quarter reporting.
Continue information sessions to gather information and create ownership	6/30/11	Through our meeting map process and the continued community development work at the local level, information sessions and modeling practices and communication which reflect our practice model continue at various levels with varied internal and external audiences.	Complete with 8th Quarter reporting.
Continue Protocol for CACD/DCFS/LLE relationships and implement recommended	6/30/11	The DCFS/CACD Mutual agreement of understanding has been amended to add clarification related to History checks, investigative procedures and documentation. Monthly meetings are conducted to discuss and obtain input related	Operational as annual review no longer part of CFSP strategy plan

change		to potential policy or statutory changes.	
NGA plan activities are integrated into strategies of the practice Model development	6/30/11	N/A	Requirement met
Transform training partnership and professional development approach	6/30/11	Consistently participate in quarterly regional training meetings; started and maintained annual site visits to Academic Partnership Universities; Increased participation and responsiveness to partners in the development of policy and programs affecting contractual relationship; Increased participation in monthly planning meetings between IVE Coordinators and Area Directors; Increased involvement of Central Office staff in training initiatives; increased participation in trainings provided to staff to assess and monitor effectiveness and responsiveness of staff to instruction.	Continues as part of strategy in 3rd year of CFSP Complete with 8th Quarter reporting.
Goal: Develop, Implement, and Monitor a Statewide Practice Model to ensure the most appropriate services are provided to children and families in a consistent manner that lead to positive outcomes.			
SECOND YEAR	**TARGET DATE**	**STATUS ACCOMPLISHMENT/PROGRESS**	**REVISION NEEDED**
Transform Foster/Adopt Parent Training	6/30/11	Training was review with no revision recommended	AR Adopted the SAFE Home study model
Review and Revise Policy	6/30/11	Document numbers 358, 375, and 464a-464n. A total of 16	Complete with 8th Quarter reporting

		documents. The Policy Unit has steadily worked to update and reorganize the DCFS Policy Manual (as well as related forms and publications). The Policy Unit works closely with internal and external stakeholders, including the DCFS Policy Review Team (established in April 2010), in its effort to revise and streamline DCFS policy and other supporting documents. The DCFS Policy Review Team is comprised of several different representatives from across the state. This team reviews all documents prior to promulgation using the Policy Review Team website. The process that the Policy Unit uses as it moves forward with the policy, procedure, form and publication revisions as is follows: 1) Policy Unit Staff Member reviews policy and may make any of the following changes: a. Adjustment to formatting b. Addition of Practice Model language c. Needed updates 2) Policy Unit Staff Member meets with subject matter expert to review initial changes and then discuss any other revisions needed to ensure that the policy	

		is accurate, clear, and family-centered. 3) Mark up version of the policy is posted to the Policy Review Team SharePoint Site for approximately two weeks to allow Policy Review Team Members time to review and post comments, questions or concerns. 4) Policy Unit Staff Member reviews comments and discusses with subject matter expert. Additional changes made as necessary. 5) Policy Unit Staff Member responds to any questions or comments from Policy Review Team Members, if applicable. 6) Promulgation Packet is prepared and sent to Executive Staff as well as other key partners such as CHRIS representatives, CACD representatives and MidSOUTH representatives for comment. 7) Policy Unit Staff Member reviews comments and discusses with subject matter expert. Additional changes made as necessary. 8) Promulgation Packet is initially filed with	

		Bureau of Legislative Research. Thirty day public comment period begins. 9) Any public comments received are reviewed and discussed with subject matter expert. Additional changes made as necessary. 10) Final Promulgation Packet filed with Bureau of Legislative Research, Secretary of State and Arkansas State Library. 11) Promulgation Packet Reviewed by Rules and Regulations Committee. 12) DCFS all email sent alerting staff that new policy is effective. All effective policy can be accessed through the online DCFS Policy Manual: http://www.arkansas.gov/dhs/chilnfam/masterpolicy.pdf Forms can be accessed at https://ardhs.sharepointsite.net/CW/FormsByNumber.aspx. Publications can be accessed at https://ardhs.sharepointsite.net/CW/DCFS%20Publications/Forms/AllItems.aspx.	

		During the past year, the DCFS Policy Unit has revised (and submitted as part of PIP reporting requirements) the following document numbers: • 358 • 375 • 464a-464n <u>Revision Needed</u>: Over the course of the next year, the Policy Unit will continue to review and revise policy with the support of internal and external stakeholders. Immediate next steps include 2011 Legislative Session updates and incorporation of policy outlining the Guardianship Assistance Program (target implementation date October 2011) and the Differential Response Program (target date October 2011). The Policy Unit will also continue to rewrite and reorganize policy in an effort to ensure accuracy and consistency, eliminate redundancy, and more thoroughly reflect the Arkansas Practice Model with the ultimate goal of restructuring the policy manual in a manner that more accurately reflects the casework process.	
Strengthen the relationship with DCFS and CACD and LLE to ensure	6/30/11	Ongoing monthly meeting between CACD and DCFS are conducted to discuss potential policy/procedural and statutory changes.	Complete with strategy 8th qtr. reporting.

safety of children			
Implement staged phase in of 2 counties/with identified practice model projects in other counties across state	6/30/11	N/A	Requirements met
Implement revised casework process designed strategically for Prevention/Support Services	6/30/11	Completed 7th quarter PIP reporting	3rd year plan will include strategy for Differential Response System and other prevention activities
Implement revised casework process designed strategically to improve investigation and safety of children	6/30/11	The Department is working to implement a Differential Response system which deflects low risk neglect cases to an assessment tract. The maltreatment allegations are being revised to ensure child safety along with a thorough investigation	PIP requirement met
Goal: Develop, Implement, and Monitor a Statewide Practice Model to ensure the most appropriate services are provided to children and families in a consistent manner that lead to positive outcomes.			
SECOND YEAR	**TARGET DATE**	**STATUS ACCOMPLISHMENT/PROGRESS**	**REVISION NEEDED**
Implement revised casework process designed to strategically for	6/30/11	Structured decision making training for new staff and a refresher for veteran staff will ensure structured decisions when assessing child safety and when conducting	Completed PIP 7th quarter reporting

Child protective Services to improve safety and permanency of children		investigations. Implementation of the Alternative Response will allow the Department to conduct assessments instead of investigations on low risk cases, this change will allow more time for investigator to conduct thorough investigations on situations involving serious child maltreatment. The maltreatment allegations are being revised to provide a prescriptive investigative process.	
Implement revised casework process designed to strategically improve outcomes of children in and out of home placements	6/30/11	Clarified roles and responsibilities into practice model language to include leadership response. The F/A process were reviewed for clarity as well as updating curriculum to 2010 version. The agency decided to adopt the SAFE home study process so implementation planning is in process. We have some challenges with tracking training records but continue to problem solve	Completed PIP 7th quarter reporting
Provide safe and permanent adoptions for all children needing adoption as their best permanency option	6/30/11	Adoption staff were given information on SAFE (Structured Analysis Family Evaluation) and all foster and adoptive home studies will be conducted by Mid-South. The Adoption Field Staff are excited about the prospect of this new study process. The Adoption Committee on Policy, Practice, and Procedures continues to assess and determine the training needs of Adoption staff. As the training curriculum review occurs with	Complete with 8th quarter reporting.

		the completed revision of functional job descriptions, training curriculum may be recommended for all staff in regards to adoption and other permanency options. These identified curriculum revisions or new development will not be identified until 7th quarter. Adoption manager review sections of policy at every field staff meeting, will Be providing adoption information at the Foster Parent Conference, and will speak at Area meetings regarding adoption issues when invited. Training for Adoptions are related to Permanency Strategy such as Permanency Round Tables Values Training, preparing children for adoption, concurrent planning, etc. All these types of training are a part of the training review process that is taking place to determine what training is needed to address specific skill sets. Adoption Supervisors are advised to review CHRIS Net reports, workloads, and monthly trend reports monthly and report what they are doing to ensure timely placements of children waiting for adoption. They provide written feedback on status of cases. Examples include Children in Pre-Adoptive Placement six months or more, children not on our Heart Gallery (may need TPR's entered in CHRIS so they will	

		automatically download). The monthly reports are also compiled and sent to Adoption Supervisors to review with their staff. This approach to analyzing data and trend reports will be an ongoing process for adoption manager and will not require further reporting.	
Implement revised casework process designed strategically for Youth Services including National Youth Transitional Database	6/30/11	• Worked with Housing Authorities in Pulaski, Johnson & Crittenden Counties on F.U.P voucher • Planned and executed "2011 Educational Achievement Award Ceremony" • Planned 2011 "Teen Leadership" Conference with NRCYD • "Shadowed" TYS Coordinators to assess skill sets and gain a better perspective of the daily activities associated with their job duties • Attended 2011 National Pathways to Adulthood Conference • Developed a "comprehensive" Coordinator monthly	Complete with 8th Quarter reporting.

		report to address concerns & assist with the identification of gaps in the service delivery system • Participated in Permanency Roundtables	
Process implements for peer reviews that align with practice model and federal requirements	6/30/11	Please reference to Pages 89-91	PIP requirement met
Goal: Develop, Implement, and Monitor a Statewide Practice Model to ensure the most appropriate services are provided to children and families in a consistent manner that lead to positive outcomes.			
SECOND YEAR	**TARGET DATE**	**STATUS ACCOMPLISHMENT/PROGRESS**	**REVISION NEEDED**
Evaluate the casework process for continuous Quality Improvement and effectiveness	6/30/11	Please reference to Pages 89-94	PIP requirement met Will continue strategy 3rd year CFSP Plan
Evaluate and change the QA process to include strategies that are effective in appropriate identifying area	6/30/11	Please reference to Pages 89-94	PIP requirement met

needing improvement			
Spec (identify data elements) Test, and train for Decision Support system	6/30/11	Several meetings have taken place with the personnel from UAMS, and the CHRIS Technical Staff. The P.A.C.E exams are going to be scanned into the CHRIS system, and the medical recommendations screen in the system is being modified to track medical outcomes from the recommendations made by medical personnel.	PIP requirement met
Enhance the Quality Services Peer Review	6/30/11	Please reference to Pages 89-94	Completed with 7th quarter reporting
Goal: Integrate DCFS practice through communication, professional development and organizational change management to build a child welfare system that keeps children safe and help families; respectfully engages families and youth and uses community-based services and supports to assist parents in successfully caring for their children. The focus will be on the safety, permanency and well-being for all children and youth.			
SECOND YEAR	**TARGET DATE**	**STATUS ACCOMPLISHMENT/PROGRESS**	**REVISION NEEDED**
Assess effective communication plan that reflects DCFS message	6/30/11	A Communication Specialist was hired for DCFS in January 1, 2011. His responsibilities include developing and implementing communication tools, researching and writing topical material related to DCFS message and practice model, respond to media request, develop feature articles for the Division, assist in planning press events and prepares press kits for events, develops talking points, develops materials for presentation as needed, and	Completed with 8th quarter reporting

		works with DCFS to coordinate media inquiries regarding child welfare issues. <u>Public Information Coordinator activities over the past 6 months</u> • Served as primary agency liaison for DCFS related public events. • Gathered positive success stories surrounding DCFS. • Reviewed and have revisions in process around the DCFS communications plan • Developed and assisted with overall statewide Foster Care Recruitment Plan-12 separate earned media appearances through TV, Radio, and Print stressing the extreme need for more foster homes in Arkansas. • Met with DCFS stakeholders, partners, and media educating them on all aspects of child welfare. • Coordinated and assisted with DCFS conferences and community day events. • Assumed lead on DCFS Newsletters. • Began development other DCFS pro motional products and brochures. <u>Goals over the next Fiscal Year</u>	

		• Meet with all County Supervisors to see what they would like to see out of DCFS's Communications Plan. • Create a consistent message (talking points) for all DCFS employees to be able to use when speaking to the public or DCFS partners and/or stakeholders on what is going on within DCFS. • Setup a DCFS Communications Steering Committee to continuously update the DCFS Communications Plan. • Develop a DCFS logo and updated tagline that can be used to update brochures, literature, letterhead, videos, etc. • Develop new media materials and a video that focus on foster care recruitment. • Update the presentation given to potential foster parents in inquiry meetings.	
Continue to improve collaboration and communication between courts and DCFS for better outcomes	6/30/11	The Director meets monthly with Ms. Tanner on legal practices and issues. Director spoke at children of court conference. She has one on one conversations with Judges as need arises. We are making progress with DNET which is	Completed with 8th quarter reporting

for children and families		data sharing.	
Continue training review in casework process to identify overall skill set	6/30/11	Initiated Comprehensive Review of established training system. Review process included the comparison of revised functional job descriptions for FSW and FSW Supervisors to established training competencies. No competencies were deleted; One Teamwork Competency was added for FSWs. We added one OJT exercise to New Worker training related to teamwork and SOC referrals and are currently proposing revisions to the New Supervisor training provided by MidSOUTH. Proposed revisions place a heavier emphasis on performance accountability through coaching and mentoring by the supervisor. Training Initiated partnering with DHS Organizational Development and Training Unit to enhance training resources available to staff. Applied for Mountains and Plains Child Welfare Implementation Center Technical Assistance grant to help with review of and establishment of enhanced supervisory practices in the State.	Completed with 8th quarter reporting
Design organizational strategies that will support and sustain the DCFS transformation process	6/30/11	Area Directors report monthly best practices and employee of month an approach with how we will assess and determine practice leaders develop DCFS receives technical assistance from Casey Family programs, NRCYD, NGA, and Children Defense Fund. DCFS personnel	Completed with 8th quarter reporting

		have been identified as practice leaders and represent all ten geographical areas of the state. Although these personnel are identified in monthly reports at "Employee of the Month," their performance has in fact been evaluated over a lengthily period of time. Many have also been identified for demonstrating "best practices" by their Area Directors, County Supervisors, and in several instances, by providers. The majority of them have been performing as both formal and informal leaders for quite some time; however, the division did not adopt a formal recognition program for top performers until November of 2009. Whether they are caseworkers, investigators, resource workers, supervisors or managers, and support personnel, these personnel have demonstrated their willingness to change the child welfare system in Arkansas, and support the principles and philosophies of our new practice model.	
Assess and develop new worker recruitment strategies within DCFS	6/30/11	3rd year CFSP Strategy Plan	PIP Requirement met
Goal: Integrate DCFS practice through communication, professional development and organizational change management to build a child welfare system that keeps children safe and help families; respectfully engages families and youth and uses community-based services and supports to assist parents in successfully caring for their children. The focus will be on the safety, permanency and well-being for all			

children and youth.			
SECOND YEAR	**TARGET DATE**	**STATUS ACCOMPLISHMENT/PROGRESS**	**REVISION NEEDED**
Develop strategies for Retention of workers at all levels within DCFS	6/30/11	DCFS has developed several strategies to share information-DHS share, e-mail, consultant, quarterly meeting, newsletter etc. Conduct survey with workers, youth, and foster parents and follow up on plans based on feedback	Completed with 8th quarter reporting
Goal: Establish an ongoing process that identifies services gaps and implements resource development at the state and local level to address those identified gaps.			
SECOND YEAR	**TARGET DATE**	**STATUS ACCOMPLISHMENT/PROGRESS**	**REVISION NEEDED**
Design a child and family services snapshot which identifies the population served and services needed based on identified risk (to establish baseline)	6/30/11	Based on results of a statewide assessment, a snapshot was developed to identify population served and services needed. Current data reports, DCFS area staff and county-by-county surveys were conducted to determine service availability, appropriateness and accessible services. Data along with Information was submitted to the DCFS Director. Information was compiled and forwarded to the Service Array committee technical support person to devise an online resource directory.	PIP Requirement met
Complete statewide assessment of	6/30/11	HZA conducted a statewide assessment of Counseling, Intensive Family Services and	PIP Requirement met

contracted, purchased, and free services for children and families and develop strategies for improving performance indicators that lead to improved services		Psychological Evaluation services. The statewide assessment found areas of strength and weaknesses as well. HZA discovered that one counseling provider was not in compliance with the performance indicators. This provider had to submit a corrective action plan. The HZA report mentioned that the system of care was not functioning consistently statewide as it should as well as some billing issues. HZA has not submitted their final report for psychological evaluations services. However; an informal review of psychological services did not reveal to be family friendly nor did some reports addressed means of strengthening families. Prevention support staff conducted research and revamped the service where the primary focus must be the child's health and welfare.	
Goal: Establish an ongoing process that identifies services gaps and implements resource development at the state and local level to address those identified gaps.			
SECOND YEAR	**TARGET DATE**	**STATUS ACCOMPLISHMENT/PROGRESS**	**REVISION NEEDED**
Conduct overview sessions of the outcomes of Step 1 (Snapshot) and 2 (Assessment of contract services)	6/30/11	DCFS Director during executive staffing sessions provides an overview of the outcomes, analysis and assessment of service from meta-analysis, and QSPR results etc.	PIP Requirement met

Increase the number of foster homes in each county to meet the individualized needs of the children including sibling groups entering care	6/30/11	After identifying report needs, they are being utilized to effectively strategize in recruitment/retention efforts. The "Current Foster Children by Latest Removal County and Placement County Summary" is used to identify the percentage of foster children who are placed outside of their originating county and area. This report allows a snapshot of the needs of each county and area, which aids in county-specific recruitment. Other reports used are the "Provider Placement Preference", which determines characteristics that foster homes will accept, the "Active, Available Foster Home" report shows current numbers of homes, and the "Monthly Count of Foster Children by Age" shows trends of the age of children in foster care by county and area, which determines the types of foster homes needed. The data and trends received from the reports were used in creating county-specific recruitment plans for each area. By analyzing the trends of characteristics of current children coming into foster care, along with looking at the characteristics currently accepted by foster homes, Resource Workers are able to create strategies to recruit foster homes to meet the needs of children in foster care. The report which shows monthly foster home closures is analyzed monthly, with contact being made to ensure best practice with these homes. This aids in	Completed with 8th quarter reporting

		retention of foster homes. Using the Current Foster Children by Latest Removal County and Placement County Summary" report allows Resource Workers to see what percentages of children are being placed out of their originating county, which aids in recruitment efforts. These statistics are also used to create a sense of urgency within the community. The Recruitment/Retention Manager continues to work with Resource Workers regarding recruitment plans for county and area. Resource Workers submitted their draft plans for review. Unfortunately, several of the plans did not reflect the AR Practice Model or best practice. These plans seemed to use duplicate strategies for different counties, did not build on the strengths of the individual counties, and missed key community partners. A couple of the area plans were good in that they showed individual focus on each county's strengths and challenges, identified active community partners, and were tailored to the demographics of each county. After the plans referenced in 4.6 are finalized, existing data reports, and if necessary, custom data reports will be developed and utilized in the management and tracking of the recruitment and retention of foster homes. Both successful outcomes and deficiencies will be continuously communicated to members of the Executive Staff, Area Directors, County	

		Supervisors, and Resource Workers in order to enhance communication for this critical tasking and improve the overall effectiveness of foster home recruitment and retention. These counties include Pulaski, Lonoke, Saline, Ouachita, Faulkner/Conway (acting as 1), Sharp/Izard/Fulton (acting as 1), Crittenden, Arkansas, Crawford/Sebastian (acting as 1), White, Johnson, Jefferson, and Cleburne. There are 3 counties that are working toward launching the C.A.L.L. but are not yet active. To date, over 400 foster, adoptive, and respite homes have been recruited and are either opened/approved or are in the process of approval by the C.A.L.L.	
Assess and enhance strategies for retention of foster parents	6/30/11	Previously reported Foster Parent Retention Plan	Completed with 8th quarter reporting
Increase the number of adoptive homes in the state to meet the individualized needs of children awaiting adoptive placement	6/30/11	The Adoption Recruitment plans have not been revised to date. Adoption Specialists are following the original recruitment plans and the Supervisors report monthly on activities. We have added a local radio station, Power 92, to our recruitment efforts. This station reaches most all of Arkansas and is geared specifically to African-American audiences. Broadway Joe is the personality who talked about adoption and has done an interview with two Adoption Specialists in Pulaski	Completed with 8th quarter reporting

		County. He was adopted, so he gives a personal perspective to adoptions.	
Goal: Create a systemic approach for data management within DCFS at all levels to justify policy, procedure, and financial changes necessary based on valid data to continually improve the ability to provide the most appropriate services and supports to children and families for positive outcomes.			
SECOND YEAR	**TARGET DATE**	**STATUS ACCOMPLISHMENT/PROGRESS**	**REVISION NEEDED**
Continue to develop improvement plan for the Quality Assurance of the QSPR process; Assess and review plan developed as implemented	6/30/11	DCFS contracts this with HZA and a work plan with timeline is developed. The QSPR is similar to the CFSR tool and process. Staff was trained by CFSR consultant. New QA levels by managers are in place. The training and QA process should address the interrelated reliability issues	Completed in 7th quarter reporting
Feedback for practice improvements and service development	6/30/11	The QSPR results are shared with Director, Assistant Director, and Area Directors. The QSPR teams follow up in 3rd and 4th quarters of year to review and its effectiveness of PIP based on QSPR results	PIP requirement met
Consolidate existing data reports to improve accessibility of effective management of data	6/30/11	On a quarterly basis, supervisors within each of DHS's 83 county offices review each active foster care and in-home case in their respective counties. The tool enables supervisors to complete their required quarterly review of all open cases in their respective counties, and supervisors must	Completed with 8th quarter reporting

		review 100 percent of their cases for a given quarter. The review provides supervisors with a one-on-one training tool to staff and discuss individual cases with caseworkers, including working with caseworkers on practice issues. The tool allows the supervisor to determine whether caseworkers know how to utilize best practice concepts; and if not, the supervisor can work with them on developing these skills. After all of the reviews have been completed for a given quarter, reports are generating offering case review information by county, area and statewide.	
Begin to develop strategies to revise the process and request enhancement to align CHRIS with practice model	6/30/11		PIP requirement met
Goal: Create a systemic approach for data management within DCFS at all levels to justify policy, procedure, and financial changes necessary based on valid data to continually improve the ability to provide the most appropriate services and supports to children and families for positive outcomes.			
SECOND YEAR	**TARGET DATE**	**STATUS ACCOMPLISHMENT/PROGRESS**	**REVISION NEEDED**
Develop training on how to access reports and	6/30/11	MidSOUTH training academies provide CHRIS COR training when requested. This training	Completed with 8th quarter reporting

understand the data including the analysis of the data from 1st year		helps staff understand the COR elements used in CHRIS and the relationship of data entries to the COR report findings. Hornby and Zeller have also provided training to Executive Staff on the Quarterly Performance Report. Greg Moore, Manager of the Quality Assurance Unit, lead a discussion about the QSPR data reports to university partners at the regional Partnership meeting in November. The focus of this discussion was to help field trainers and coordinators better understand the relationship of the data reports to training needs/issues. The following items were highlighted as the most relevant to field staff training: ☐ Services to family to protect children in the home and prevent removal or re-entry into foster care, (Item # 3) ☐ Risk assessment and safety management (Item # 4) ☐ Child and family involvement in case planning (Item # 18) • Caseworker visits with the child (Item # 20 The PDU and QSPR manager developed a training reporting template	

		to help DCFS supervisors begin to link training activities specifically to the casework model as well as to think through how training relates back to specific QSPR items and Practice Model goals. The intent of this tool is that each Area Director and county supervisor uses the local QSPR findings and the Practice Model goals as a reference for identifying appropriate training/skill development activities for that area/county. CHRIS staff also conducted CHRIS overview training to new Central Office personnel in four 3 hour sessions. This training focused on organizational CHRIS screens, contract provider payment processes and CHRIS Net data reports.	
Conduct annual surveys and align with practice model that collect information in regard to client satisfaction and needed improvements for quality and practice improvement	6/30/11	Surveys conducted from July 1, 2010 and June 30, 2011 include: DHS Cultural Survey Foster Parent Survey Finalizing Results of the 3C Training feedback (field staff	Completed with 8th quarter reporting
Goal: Develop, Implement, and Monitor a Statewide Practice Model to ensure the most appropriate services are provided to children and families in a consistent manner that lead to positive outcomes.			

THIRD YEAR	TARGET DATE	STATUS ACCOMPLISHMENT/PROCESS	REVISION NEEDED
Assess and continue staged practice model change strategy	6/30/12	**Community Services (CS)-** As needed provides feedback on the reports and plans to support timeframe work, encourage staff, continue assessment of skills and provide written follow ups to the Area Directors regarding their monthly reports and corrective action plans. Also conducts face to face monthly meetings with each Area Director and phone conferences as needed. **Professional Development Unit (PDU)-**Continued work with the Mountains and Plains Child Welfare Implementation Center (MPCWIC) has helped the Division develop a strategic plan specifically designed to support the development of supervisor capacity, through skill development, support systems and a structured change management tool referred to as Learning Circles. This project utilizes stakeholder feedback and participation throughout all phases of planning. With Technical Assistance support, the implementation process models both the Practice Model Principles/Values and the established tenets of Implementation Science. PDU has increased participation in Area Director and IVE Partnership monthly training assessment meetings. While	3rd year CFSP Strategy Plan supports

		more consistent participation is still needed, these meeting forums have helped the PDU manager and administrator identify common professional development concerns across the state. As a part of these meetings, PDU has been able to reinforce the importance of the QSPR as a planning tool related to professional development activities and has facilitated collaboration opportunities with the Department's Organizational Development and Training (ODT) Unit. Currently ODT is participating in the Learning Circle "arm" of the MPCWIC project and is helping two Areas assess and develop plans promoting team development and collaborative work across counties. DCFS and the Partnership continued collaborative work with UAMS to develop Trauma Informed Workforce training for all field staff. A Train the Trainer was held in December 2011 and field staff training began in February 2012. Collaboration with UAMS continues. The PDU Manager and Administrator have also used the "parallel" process to help identify new areas of continued development in the IVE Partnership. Examples include researching Field Training Competencies, developing a stronger OJT structure for new DCFS Supervisors and assessing needed professional development activities for field	

		trainers. The PDU Training Coordinator models Practice Model Values when helping employees (especially new staff) learn how to use the Departmental Travel Reimbursement system. She has received numerous emails expressing appreciation for her responsiveness and assistance. This specific example also reflects the efforts of all PDU members in other administrative areas.	
Goal: Develop, Implement, and Monitor a Statewide Practice Model to ensure the most appropriate services are provided to children and families in a consistent manner that lead to positive outcomes.			
THIRD YEAR	**TARGET DATE**	**STATUS ACCOMPLISHMENT/PROCESS**	**REVISION NEEDED**
Continue to convene PIP Practice Model Workgroup (Advisory Board)	6/30/12	**The Advisory Board** continues to meet periodically throughout the year. Each agenda includes discussion of changes, initiatives, consideration of changes in policy, practices, or new implementation of programs which includes consideration and discussion on how this aligns with the goals and principles of our practice model.	
DCFS will continue engagement of field staff in the implementation of the practice model in the	**6/30/12**	**CS-**Interaction with central office staff, AD Meeting agenda, Case consultation, Attendance of Quarterly trainings and area meetings in the field, Work with other key central office staff to attend area	

strategies implemented over the last two years and others as needed. (i.e. case consultations; practice guide and policy development)		& quarterly meetings in the field. **The DCFS Policy Review Team** continues to exist to review newly proposed and/or revised policies, procedure, forms, and publications. The DCFS Policy Review Team is comprised of several representatives from across the state including an Area Director, unit supervisors, and FSWs. Other staff and stakeholders are also contacted on an as needed basis when policy is being developed or updated to review policy. The Policy Unit also continues to use feedback received from staff and stakeholders regarding policy issues to improve policy (i.e., functionality, clarity, address gaps, etc.). The National Family Preservation Network provided a one day training (June 2011) for DCFS staff ,and IFS contract providers on the Fundamentals of Intensive Family Preservation Services along with case planning and engaging families. Providers and caseworkers are now more aware and can better assist families in identifying their own needs. People can and do change. When families are engaged in identifying their supports and needs, staff can expect change and improvement. Inter-Divisional Staffings on Complex Cases has continued twice monthly throughout this	

		past year with increasing requests for assistance in case planning, especially for those children and youth with serious mental health issues. An additional staffing has been added, once monthly beginning June, 2012 to target foster children in custody of the Division of Youth Services (DYS). All dual-custody youth committed to DYS within the past month will be reviewed; recommendations provided for best practice and ensure ongoing case plans by both agencies are working toward the same goals. With increasing utilization of Inter-Divisional staffings, it may be necessary move to a weekly schedule. The mental health specialist continues to provide case-specific consultation on an informal basis, as needed to support and guide field staff in cases involving children with major mental health issues. Involvement has included appearances in court to provide expert witness, consultation with mental health facilities, inpatient, residential and outpatient's services, and facilitating meetings with local community mental health and DCFS staff to assist in development of formal and informal mechanisms for communication to address mental health service needs for foster children and their families. **The Adoption** recruitment plan includes involvement of field staff, particularly the Action	

		Plan written as part of the 2012 Regional Roundtables. In that initiative we will select the 100 children who have been waiting the longest for an adoptive placement, review the case, and schedule permanency roundtables to include adoption staff, the county worker assigned to the case, AAL's, CASA, OCC attorneys, and anyone else who has involvement in the case, in order to make decisions on the appropriate goal, possible placements, and needed services. Adoption Manager has met with judges and will continue to do so to address what is needed in the selection process, workloads, recruitment, and feasibility of contacting relatives in some cases. Adoption Manager has met and will continue to meet with Area Directors on these same issues. Adoption Manager meets at least every other month with all adoption staff to discuss new programs, training concerns, placements, recruitment, and other issues of concern. Program Managers are invited to share information about their programs including mental health, independent living, policy, CHRIS issues, Medicaid, and others. MPCWIC Learning Circle Workgroup along with the Care, Commit and Connect Workgroups Quarterly and Monthly Training Meetings at MidSOUTH and	

		with IVE Coordinators	
DCFS will continue the development of practice guides and other tools as outlined in plans developed.	6/30/12	The Policy Unit plans to assist in the development of practice guides the next year which include Subsidized Guardianship (in development) and psychotropic medication management.	
Shift in the number of children entering foster care and increase in the number of children being supported in their own homes	6/30/12	**(CS)**--Data and reporting, and Coaching: • Children entering foster care SFY2011: 4,229 • Children entering foster care SFY2012 as of 6/26/12: 3,890 • Open protective service cases of children that were open at the end of SFY2011 and were not removed from the home: 2,618 • Open protective service cases of children that are open as of 6/26/12 (SFY2012) and were not removed from the home: 2,506	
Goal: Develop, Implement, and Monitor a Statewide Practice Model to ensure the most appropriate services are provided to children and families in a consistent manner that lead to positive outcomes.			
THIRD YEAR	**TARGET DATE**	**STATUS ACCOMPLISHMENT/PROCESS**	**REVISION NEEDED**

Effective Training that focus on parenting children in foster care	6/30/12	**PDU-**Requested and received two names of parenting education programs designed to better meet the needs of parents with children in the Child Welfare system.	
Continue analysis of policy	6/30/12	**Policy** analysis is an ongoing activity within the Policy Unit. The unit continues to try to strengthen the clarity of policy as well as incorporate more family-centered directives while also attending to other needed revisions to comply with changes in the law or other directives received from the agency. The desired outcome of this continued policy analysis and revision is to achieve better outcomes for the children, families, DCFS staff, and other stakeholders affected by DCFS policy. Major tasks for the Policy Unit over the past year have included (please see attachments for more complete summaries of packets promulgated during SFY 2012): • Updating all policies, procedures, forms, and publications to comply with acts passed during the 88th General Assembly, Regular Session 2011; • Developing Arkansas's Subsidized Guardianship policy and procedures and related forms; • Revising the Name Removal Committee	

		policy and procedures to provide more clarity which should allow qualified and appropriate individuals to be removed from the registry in a more timely manner. Upcoming projects include rewriting the Foster Parent Handbook so that it more thoroughly addresses issues affecting foster parents and the children placed in their home as well as reworking the Transitional Youth Services policy to more fully address issues such as sponsorship programs for youth in extended foster care and minor mothers and their children. The mental health policy requiring DCFS staff to obtain an assessment from the local community mental health center prior to referring a child under the age of ten years to psychiatric inpatient facility resulted in 68% diversion rate in SFY1. Reports indicate that 125 children were diverted from institutionalized care to more appropriate community-based services. As a result of this success, DCFS promulgated policy extending the requirement of a community-based assessment for **all** children in foster care. This policy also now requires that all children, age 3 and above must be referred to the local community mental health center within 5 days of entering care. The previous policy required referral of children	

		school-age and above but with increased research on mental health needs and outcomes of young children, it was determined that DCFS would quickly address the mental health needs of younger children.	
Strengthen the relationship with DCFS and CACD and LLE to ensure safety of children	6/30/12	**CS**--Monthly meetings with CACD and develop and implementation of DCFS participation in CACD meetings.	
Improved assessment of families & support to prevent removal & keep children safely in own home	6/30/12	Contract providers as well as staff are able to link our families to resources to ensure that their basic needs are met. Once needs are met, vendors can provide crisis intervention which would provide the support to prevent removal and keep children safely in their own homes. DCFS is beginning to see improvement in assessing families based on results of surveys of families receiving services and data submitted by vendors. Clients are linked to community resources. This prevents removal and keeps the family stabilized. Tools and resources that are utilized to determine whether we are improving the assessment of families and support to prevent removal and keep children safely in their own home are: Data (COR, 120 day in home & placement visit report), Support & participate of QSRP & review of data follow-up, Review of cases &	

		assessment for practice and compliance Consultation reflective conversations and coaching on practices when addressing targeted complaints, and **PDU--**Provided a second round of Structured Decision Making (SDM) training to DCFS Supervisors, Investigators and CACD investigators Identified basic components of modified Structured Decision Making training for all FSWs; including a focus on safety/risk assessment for in-home and out-home cases Identified basic components of Structured Decision Making Supervisor training	
Goal: Develop, Implement, and Monitor a Statewide Practice Model to ensure the most appropriate services are provided to children and families in a consistent manner that lead to positive outcomes.			
THIRD YEAR	**TARGET DATE**	**STATUS ACCOMPLISHMENT/PROCESS**	**REVISION NEEDED**
Improved assessment of family's needs and access to services to safely maintain children in their own home	6/30/12	Access to services is still problematic for some areas. Performance Indicators for some services were amended to ensure that services when possible is provided in the home to prevent clients from missing work and or school. This appears to be working well for the families. However; this is the first year that the amended PI's were implemented therefore unable to report	

		outcomes. **PDU**-See above SDM comments Created planning workgroup to identify appropriate topics for an intermediate level FSW training. Assessment of needs and services will be evaluated.	
Timely and appropriate match for children in adoptive families	6/30/12	The Matching Website is up and running and we are in the process of ensuring all home studies are scanned into a folder which connects to the CHRIS system. The file is named from the provider ID. Staff are now using the website. This will assist in not only timeliness, but also in better matching of children with prospective adoptive families.	
Established casework process for youth in foster care and ways of measuring success when transition to adulthood	6/30/12	**CS--**Continued assessment of needs and strategies on how youth can be supported. Assessing and developing NYTD plans monitor with log and Additional NYTD Training **Transitional Services Unit (TSU) -** Developed a pilot initiative that would create a "Transitional Youth Services Unit" This unit will be comprised of Family Service Workers, TYS Coordinators and local County Supervisors. The unit will primarily work with the 14-21 year old population. The goal is to provide additional supports to staff that would in turn allow them more time to "engage" the 14-21 year old population.	

Continue QSPR process that aligns with practice model developed and implemented	6/30/12	The QSPR Manager is actively involved in a variety of professional development activities. This includes strengthening supervision coaching practices, and accountability. DCFS Director conducts a meeting to review the findings of each Area's QSPR. The County Supervisors, Area Manager, relevant front line staff, QSPR manager, Planning manager, and Assistant Director for Community Services participates in these meetings. Discussions include strengths, challenges, trends, innovative practices, and problem solving.	
Goal: Develop, Implement, and Monitor a Statewide Practice Model to ensure the most appropriate services are provided to children and families in a consistent manner that lead to positive outcomes.			
THIRD YEAR	**TARGET DATE**	**STATUS ACCOMPLISHMENT/PROCESS**	**REVISION NEEDED**
Continue to evaluate case progress and make improvements through the development of quality improvement strategies	6/30/12	The QSPR Manager is actively involved in a variety of professional development activities. This includes strengthening supervision coaching practices, and accountability. DCFS Director conducts a meeting to review the findings of each Area's QSPR. The County Supervisors, Area Manager, relevant front line staff, QSPR manager, Planning manager, and Assistant Director for Community Services participates in these meetings. Discussions include strengths,	

		challenges, trends, innovative practices, and problem solving.	
Continue to evaluate and shift the QA process to include strategies that are effective in appropriately identifying areas needing improvement	6/30/12	The QSPR Manager is actively involved in a variety of professional development activities. This includes strengthening supervision, coaching practices, and accountability. DCFS also plans to strengthen the follow up on recommendations from special studies conducted by HZA. The 3 C's Commit workgroup is working on a revision of the Supervisory Review tool to develop something more user friendly and practice outcome oriented.	
Dashboard accessible for data management	6/30/12	The department has moved from individual data warehouses to a consolidated warehouse with a decision support system and is working on dashboard capabilities for all divisions. The planning has recently started and in the near future, working groups will be formed to survey Senior Managers and Program Managers from the individual divisions to formulate dashboards that cover high-level snapshot views, down to functional day-to-day operational dashboards that provide Central Office Program Managers and Field Staff with pertinent, up to date operational information. In addition, the division utilizes data reports that are static for staff at all levels to both manage	

		and perform mission critical day to day operations. These reports are grouped by functional areas and are produced by the CHRIS Support Staff, and by contract personnel from Hornby Zeller and Associates.	
Improved QSPR process with involved stakeholders and inter reliability for consistent reviews	6/30/12	DCFS is working to expand the impact of the QSPR process through continued engagement of stakeholders. The Division intends to increase stakeholder involvement in the actual review process by training select individuals on how to conduct the reviews and having them review real cases. DCFS continues to focus on ensuring inter-rater reliability through a tiered case review system in which every reviewer's case ratings are reviewed and approved for accuracy and adherence to the protocol.	
Goal: Integrate DCFS practice through communication, professional development and organizational change management to build a child welfare system that keeps children safe and help families; respectfully engages families and youth and uses community-based services and supports to assist parents in successfully caring for their children. The focus will be on the safety, permanency and well-being for all children and youth.			
THIRD YEAR	**TARGET DATE**	**STATUS ACCOMPLISHMENT/PROCESS**	**REVISION NEEDED**
Continue message consistent with	6/30/12	Activities completed in SFY 2012	

practice model		• Developed numerous brochures
		  o Differential Response
		  o What is DCFS?
		  o Care Commit Connect
		  o Foster Care
		  o Extended Foster Care Program
		  o Answering the Call
		  o Worked with Transitional Youth Director – on Aging Out – Don't Miss Out booklet
		
		• Developed PSA – short and long versions – for Foster Parent Recruitment
		
		• National Child Abuse Prevention Month activities
		  o Radio Stations appearances
		  o TV station appearance stories
		  o Press release to all media outlets including print media
		  o Press conference
		  o Statewide advertisements in	

		regions impacted by Arkansas Press Association o Spanish Newspaper in NWA "La Presna Libre" – did 2 weeks of advertisements o Hola Arkansas – Spanish/English newspaper – 5 weeks of advertisements o Helped with design and messaging on bookmarks • Worked with design/print materials for Youth Empowerment Institute • Worked with design/print materials for Youth College Tour • Set up statewide community stakeholder meetings regarding Differential Response • Attended Inquiry meetings statewide to see impact, hear issues, etc. • Developed and submitted Divisional newsletter – 2 times during SFY 2012 • At statewide supervisor meeting – gather information regarding	

		communication needs and styles o Staff indicated – DCFS All emails are being deleted ▪ Need to bullet point informati on o Staff would like to see Director Radio Address monthly o Discussed methods of newsletter distribution APSR – Communications Activities for SFY 2013 ▪ Refill Communication Specialist position ▪ Continue with DCFS Director communication activities o Speaking at conferences o Speaking at legislative committees o Speaking at annual Judicial summit o Speaking at foster parent association meetings o Speaking at staff meetings	

		▪ Central Office ▪ Area Director meetings ▪ Adoption meetings ▪ Statewide supervisor meeting ▪ DHS Leadership meetings ▪ Continue communications through Mountains and Plans Child Welfare Implementation project ▪ Develop feature articles for DCFS ▪ Assist with planning press kits for events ▪ Develop specific talking points about DCFS and our vision for various audiences ▪ Continue to review, revise and develop Divisional brochures ▪ Update Inquiry meeting PowerPoint ▪ Newsletter development and submission ▪ Develop specific messaging as Division implements new ideas, etc.	
Improved	6/30/12	**Community Services-**attended	

collaboration between courts and DCFS for improved outcomes for children and families		quarterly meetings, Judge's meetings, attending court and attending Judge's conferences **TYS-**State Coordinator for Transitional Youth Services is currently serving on the DYS Special Populations Committee, this committee meets at the Administrative Office of the Courts and AOC staff facilitates the meetings. The group is looking at ways to provide appropriate placement options for "hard to place" populations.	
Integrate at priority level 1 strategies that support and will sustain the DCFS transformation process	6/30/12	DCFS assesses the effectiveness of contracts by reviewing outcomes which are due according to Performance Indicators the end of June. DCFS ~~can~~ also assess the effectiveness of services by conducting surveys with families as well as pre and post results of the NCFAS for IFS services. Family Satisfaction Surveys are conducted however participation is voluntary. The amounts of surveys returned are low however generally they are positive feedback and we do use all comments in assessing the effectiveness of the program.	
Annual activities for recognition of worker and decreased turnover	6/30/12	**CS-**Implementing successes and recognition @ Quarterly Supervisors Meetings, Services recognition at statewide meeting, MPCWIC, Feedback on site visits	
Goal: Integrate DCFS practice through communication, professional development and organizational change management to build a child welfare system that keeps children safe and help families; respectfully engages families and youth and uses community-based services and supports to assist parents in successfully caring for			

their children. The focus will be on the safety, permanency and well-being for all children and youth.			
THIRD YEAR	**TARGET DATE**	**STATUS ACCOMPLISHMENT/PROCESS**	**REVISION NEEDED**
Implement strategies for retention of workers at all levels of DCFS	6/30/12	**CS**-follows up with a call with staff that resigns and ask questions about their work with and for DCFS.	
Goal: Establish an ongoing process that identifies services gaps and implements resource development at the state and local level to address those identified gaps.			
THIRD YEAR	**TARGET DATE**	**STATUS ACCOMPLISHMENT/PROCESS**	**REVISION NEEDED**
DCFS will continue the contracts monitoring process implemented in the PIP to improve purchased and contract services provided and continue with follow up processes to sustain effectiveness.	6/30/12	Performance Indicators for the Human Service Worker in the Schools, IFS, counseling, home studies and psychological evaluations were amended to ensure that services build on the strength of families to foster prevention and reunification when possible. Outcomes were added to all of the mentioned contracted services in order to determine the effectiveness of the programs. These programs are monitored monthly through the certification of compliance and amendments will be implemented as needed. Some purchased service request for counseling, medication management and psychological evaluations is now sent to the Prevention unit for review and approval. This is done to ensure that the purchased services aren't duplicated with contractual services, appropriateness and assistance	

		in locating vendors in rural areas. This is the first year that the amended PI's were implemented therefore unable to report outcomes. There have been some challenges with an attorney ad litems and a judge adjusting to change for one of the services. The mental health specialist began increasing review of issues related to seclusions and restraints of foster children while in psychiatric inpatient facilities. Incident reports and viewing videos of the incidents are included in the review. These reviews have resulted in requirement corrective action plans by facilities and revision of treatment plans for individual youth. If a report of abuse is made regarding a child in a psychiatric facility, the mental health specialist began monitoring action taken by those facilities, ensuring that until an investigation in substantiates the allegation; the alleged offender at the facility does not have contact with children in foster care.	
Goal: Establish an ongoing process that identifies services gaps and implements resource development at the state and local level to address those identified gaps.			
THIRD YEAR	**TARGET DATE**	**STATUS ACCOMPLISHMENT/PROCESS**	**REVISION NEEDED**
Services developed to	6/30/12	**Prevention Unit-**reviews the intake and closure results from	

meet the individualized needs based on accurate data reports for families within the local community		the North Carolina Family Assessment Scale. The Unit also reviews the contract monitoring results from HZA and review results from family satisfaction surveys.	
Goal: Create a systemic approach for data management within DCFS at all levels to justify policy, procedure, and financial changes necessary based on valid data to continually improve the ability to provide the most appropriate services and supports to children and families for positive outcomes.			
THIRD YEAR	**TARGET DATE**	**STATUS ACCOMPLISHMENT/PROCESS**	**REVISION NEEDED**
Assess data reports and feedback on accuracy and develop strategies to improve practice with families	6/30/12	QPR, QSPR COR & Mustang reports for in-home and foster care placement are reviewed by Area Directors and follow-up provided.	
Accurate data management reports for managers and supervisors to focus on items and practices to improve	6/30/12	QPR, QSPR COR & Mustang reports for in-home and foster care placement reviewed by Area Directors and follow-up provided	
Goal: Create a systemic approach for data management within DCFS at all levels to justify policy, procedure, and financial changes necessary based on valid data to continually improve the ability to provide the most appropriate services and supports to children and families for positive outcomes.			
THIRD YEAR	**TARGET DATE**	**STATUS ACCOMPLISHMENT/PROCESS**	**REVISION NEEDED**
DCFS will	6/30/12	The only survey conducted this	

continue with annual surveys to have a continuous quality improvement process in assessing and improving practices at all levels and reflect our practice model.		year was integrated as a part of the special study on foster home development process. In partnership with AOC, their youth staff conducted studies with our foster parents and we assisted with that survey.	
Goal: Develop, Implement, and Monitor a Statewide Practice Model to ensure the most appropriate services are provided to children and families in a consistent manner that lead to positive outcomes.			
FOURTH YEAR	**TARGET DATE**	**STATUS ACCOMPLISHMENT/PROCESS**	**REVISION NEEDED**
Assess status of each County practice model	6/30/13	**Community Services (CS)-** Monthly report continues & support time frame work. Encourage staff skills assessment, and written follow-up to Area Directors on monthly reports. **Transitional Youth Services (TYS)-**The practice model is promoted within the field by attending Area celebrations (PIP), providing training and coaching to field staff and by stressing the importance of "authentically engaging our youth". **Behavioral Health Specialist (BHS) -** Inter-Divisional Staffings on Complex Cases occurs 3 times monthly. This staffing includes representatives from other DHS Divisions, including Youth Services, Medicaid, Behavioral Health,	

		Developmental Disabilities, and other stakeholders specific to the child such as CASA, attorney ad litem, etc. In the past year, an additional staffing was added to review dual custody cases to insure that best practices in service provision and collaboration are occurring within both divisions. Monthly reports are produced by DCFS Areas, detailing completion of recommendations. Practice issues identified are addressed, as necessary, with County Supervisors, Area Directors, and family service supervisors. **SQPI-** The Service Quality and Practice Improvement (SQPI) Unit conducted both supplemental and full Quality Services Peer Reviews (QSPR) between July 1 and December 31, 2012. The supplemental reviews were conducted during the overlapping year of Arkansas's PIP to determine if the State met the negotiated goals of improvement for Items 18 and 20. The full QSPRs were consistent with Arkansas's normal practice improvement processes. The QSPRs assessed and highlighted the strengths and areas needing improvement in practice in each of the service areas reviewed during that time period, thus allowing each Area to develop, assess and/or revise the implementation strategies for their practice models. Specifically, supplemental reviews were conducted in Areas 1, 2, 7 and 8, while full QSPRs were conducted in Areas 5, 6, 9 and 10.	

		PREVENTION SUPPORT (PS) - The prevention unit promotes the practice model in the field by advising staff of changes to contracts that allows services to be more flexible and to engage our families. The practice model is also available on the prevention website and is accessible to stakeholders and staff 24/7. There have been 271 hits/reviews online of the practice model since it was uploaded 9/15/2012. **FOSTER CARE:** Provides case consultation s for approval of foster parents; permanency roundtables conducted with best practice values and principles; case consultations regarding case plan goals for guardians are conducted with best practice considerations, permanency team conducts follow ups with best practice as talking points. During foster parent conference, CARE, Commit, Connect was part of the theme and foundation for the event. **PROFESSIONAL DEVELOPMENT UNIT (PDU)-**Principles. This includes: • Behavior change and the work of change is a part of our daily challenge. • The entire system must support frontline practice to achieve positive outcomes with families. • Sustainable success with families is the work of a	

		team. • Skill based training and consultation forms the foundation for successful practice with families. • Quality improvement and accountability guide all of our work. • How we do the work is as important as the work we do. The following provides a summary of these efforts: *AR CIRCLES (MPCWIC)* *Please see collaboration for this update* DCFS, the Academic Partnership, and UAMS (also represented on the current planning committee for future trauma focused training) began offering the one day Trauma Informed Training in February 2012 and completed the training in December 2012. To sustain this effort, the planning committee agreed to replace the grief and loss portion of New Staff Training (NST) with the content of the one day Trauma focused training. Currently members of the planning committee are working on the development of three shorter, trauma focused training modules. The training modules build on individual essential elements introduced in one day training. The planning committee also wants to give staff an opportunity to select a trauma focused topic of interest to them. A variety of delivery methods, including online	

		options, are being explored. Academic Partners have developed a draft of a three month OJT program for new supervisors who have been promoted within the division. The program uses safety, permanency and well-being as monthly OJT themes, includes a self-assessment, tutorial information, and focuses on CHRIS reports targeting correlating data. Supervisors are also asked to shadow staff once during each of the OJT months. The shadowing exercise to reinforce the importance of observing transfer of learning from training events and performance related to Safety, Permanency, and Well-Being. The proposal is almost ready for Executive review and approval (see Training Plan updates for more specific information). The Division also continues work on the development of an intermediate level training program for FSW with 12-18 months field experience. Topic focus is tentatively identified as Domestic Violence, Substance Abuse, and Engagement. The initial planning committee needs to re-evaluate whether to include a focus on adoptions due to a recent change in adoptions staff oversight. The PDU Manager provided technical assistance to the Differential Response (DR) Program Manager at planning stages of initial training development. This assistance included facilitated discussion	

		regarding audience analysis, training objectives and training outline development. The DR Program Manager developed and implemented the initial DR training in the September 2012. The PDU Training Coordinator models Practice Model Values when helping employees (especially new staff) learn how to use the Departmental Travel Reimbursement system. As a part of these efforts, she has developed a Travel Tips Sheet and example forms handouts which she has shared with MidSOUTH Academy staff. She has also visited the Little Rock MidSOUTH Academy to speak directly with staff about questions they have about the reimbursement process. She has assumed additional administrative duties and has also worked closely with vendors to coordinate efficient payment processing. **CPS-** In support of the Division of Children and Family Service's ongoing commitment to assess its child maltreatment investigations, a review of each service area's performance is conducted every state fiscal year. The reviews are designed to measure compliance and identify training needs as well as possible policy and procedural changes at the local and statewide levels. During the last fiscal year reviews were conducted with 600 randomly selected closed child protection investigations, 50 from each service area. The Area reviews focused on the strengths and	

		areas needing improvement throughout the state, addressing three aspects of the investigations, Initiation, Thoroughness and Disposition.	
Goal: Develop, Implement, and Monitor a Statewide Practice Model to ensure the most appropriate services are provided to children and families in a consistent manner that lead to positive outcomes.			
FOURTH YEAR	**TARGET DATE**	**STATUS ACCOMPLISHMENT/PROCESS**	**REVISION NEEDED**
Continue to convene PIP Practice Model Workgroup (Advisory Board)	6/30/13	*Please see collaboration section*	
Continue information sessions to gather feedback of practice model implementation	6/30/13	**FC-** DCFS approached various events and forums to share our vision underlying the practice model and encouraged conversation and feedback from all audiences. Meetings minutes provide feedback and monthly reports further inform the division. The permanency roundtables have a debrief as a part of process that will provide feedback. The enhancing supervision project communication plan includes feedback loops. HZA conduct special assignment each year that often includes internal meetings with staff and stakeholders and provide feedback and recommendations.	
Continue strengthening CACD/DCFS/LLE	6/30/13	**CS-**Monthly meetings with CACD to address any issues and find solutions. Assures DCFS participation in CACD	

relationships		meetings. **POLICY**- During fall 2012 the Policy Unit worked to update policy to reflect changes to the DCFS and CACD Agreement. The Policy Unit collaborated with members of CACD to do so. **CPS**- DCFS and CACD negotiated a new Arkansas State Police Agreement during the fall of 2012. The agreement provided CACD with clear guidelines for contacting DCFS to request a Health and Safety assessment during a pending investigation. The agreement also made changes to allow CACD the ability to complete all of the investigative activities on investigations assigned to them if the disposition is unsubstantiated. An additional change with the new agreement provided DCFS the ability to input their case involvement into the CHRIS database, if the DCFS investigator was serving in the role of secondary investigator. These changes will enhance the collaboration between DCFS and CACD and improve the quality of the investigations. DCFS and CACD continue to meet monthly to discuss investigative policies, procedures, and best practice. On November 14, 2012, CACD convened a joint meeting with DCFS Area Directors and CACD supervisors and administrative staff. The meeting provided DCFS and CACD an opportunity to discuss the changes to the new Arkansas	

		State Police Agreement. **PDU-** New CACD staff were invited to attend Structured Decision Making (SDM) Training offered in the late Fall/early Winter.	
Continuing shift in the number of children entering foster care and increase in the number of children being supported in their own homes	6/30/13	**CS-** Utilizes data and reporting, coaching, and a planning group development to create an In-Home unit. Also use case consultations to support the field. **BHS**- DCFS's System of Care (SOC) Director works with Behavioral Health and SOC providers across the state in planning and development of wraparound services. This staff member also is a member of the Child and Adolescent Service System Program (CASSP) statewide council, which provides oversight for non-traditional, wraparound services at the local level. DCFS involvement is essential to supporting the development of services for families to decrease the need for children to enter custody. **POLICY-** Developed Differential Response (DR) policy for newly implemented DR program. The goal of this program is to strengthen families involved in low-risk child maltreatment allegations and to prevent removal of children by keeping them safely in the home by linking the family to appropriate community services and supports. DR is currently being piloted in approximately 10	

		counties. It was first implemented in October 2012. **SQPI-**The SQPI Unit conducted full QSPRs in Areas 5, 6, 9 and 10 between September 24 and December 21, 2012. The QSPRs assessed and highlighted the strengths and areas needing improvement in practice in each of these service areas. In doing so, the reviews addressed the degree to which each Area was able to provide sufficient services to prevent the removal of children from their families. These reviews also highlighted inconsistencies in casework between in-home and foster care cases so as to address the strong practices upon which the Areas could build and the weaker areas of practice needing shoring up to safely serve children in the family home and prevent their entry into foster care. The QSPRs highlighted the importance of both formal and informal assessments of risk and safety, family engagement and individualized services with regard to family preservation. **PS-**Prevention and Support monitors contract providers to determine if the service that they are providing adhere to the performance indicators in keeping and supporting children in their own home when appropriate. **DR-** Arkansas has implemented a Differential Response program dependent on specific allegations. This will be a part of our strategy to strengthen prevention of child abuse and	

		neglect. **PDU-**Ed Cotton developed and provided, along with co-trainer Chantel Barber, SDM training to non-investigative staff across the state beginning in October. This training focused on understanding the difference between safety and risk; along with the development and use of protection plans when a safety factor has been identified; as well as promoting the practice of leaving children in their home when safely possible.	
Training partnership is repositioned and providing effective support to field	6/30/13	**PDU-**New Deliverables (Performance Indicators) were added to the FY 13 contract with the Academic Partners. These deliverables include: Researching Field Training Competencies as the first step in developing a competency based training model for field training staff, developing a stronger OJT structure for new DCFS Supervisors (noted above); development of an orientation process to DCFS for new field trainers and providing support to the Learning Circle process by serving as coaches to LC facilitators. Other efforts also include: • The development of a knowledge management system by UAF. This technical landscape possesses functionality that is not currently possible through such tools as SharePoint. Future applications that are possible with this	

		environment are reporting information in real time, online training videos, resource networking, data organizational management, and training resource management. Currently it supports training development and communication among Academic Partners and is being used to support AR CIRCLES implementation efforts with Learning Circles and potentially work of the Network/Resources Workgroup. • The creation of a training development position within the UAF partnership network. Traditionally training development was more a function of the MidSOUTH contract. This position is currently filled by Kimberly Keith with Southern Arkansas University (SAU). Ms. Keith has played an instrumental role in the development of an one hour Supervisor Grief & Loss (Trauma Focused) training for supervisors, developing an additional training program to support coaching skill development, lead coordination the new supervisor OJT program (she is also developing	

		program pieces) and serving on the committee established to research field trainer competencies. • A workgroup has been formed to develop a DCFS orientation process for new field trainers. The PDU Administrator chairs this group. • The Quarterly Partnership Meeting Forum has been modified to using a Knowledge CAFÉ format. A Knowledge CAFÉ format using a rotation of small group discussions. Each group is facilitated and focused on a single topic to gather feedback and/or address identified topic areas. The first Knowledge CAFÉ topic focused on gathering feedback related to field trainer competencies. Another proposed topic is the development of new worker tools notebook and recently identified, a refresher of key principles for LC coaching. Kim Keith has been added as a member of the Training Skills and Development Team (TSDT). The QSPR Manager, two Area Directors, and the Assistant Director of Community Services have also been added to this training	

		systems oversight team	
Goal: Develop, Implement, and Monitor a Statewide Practice Model to ensure the most appropriate services are provided to children and families in a consistent manner that lead to positive outcomes.			
FOURTH YEAR	**TARGET DATE**	**STATUS ACCOMPLISHMENT/PROCESS**	**REVISION NEEDED**
Improved well-being of children and support and retention	6/30/13	**FC-** Strategies we have in place for this are: • After-Hours Medical Resource Line • Volunteer State Foster/Adoptive Parent Liaison • Foster Parent Groups • Annual Foster Parent Conferences held at the local level to provide the opportunity for foster parents to receive required training and network with other foster parents. • The Academic Partnership also provided one hour training, Promoting resilience: A Trauma Focused Training for 67 supervisors. The was designed to meet the legislative mandate for one hour of annual grief and loss, while allowing the division to remain focused on the trauma focused intervention strategies. • The 2013 trauma Lunch and Learn is titled, "Taking it back to work; Managing the Effects of Trauma for Kids and Families."	

		• UAMS has also provided trauma focused training to an estimated number of 120 Foster Parents at local conferences in Area 1 and 7.	
Continue analysis of policy	6/30/13	**CS-**Ongoing as requested. Very involved in meeting and legislation and policy changes. **TYS**- The TYS unit continues to analyze policies and assess their effectiveness. We are currently making adjustments to the following policies. • Annual Credit Checks for TYS youth • The role of the "Sponsor" • Defining approved "TYS Housing options" • Medicaid to 26 **BHS-** Adherence to the mental health policy implemented in the last state fiscal year is monitored through review of data on children admitted to inpatient psychiatric facilities and child-specific case review in Inter-Divisional Staffing. The Mental Health specialist provides technical assistance to the field on specific cases, as well as formal presentations across the state to clarify policy and procedures and reasons or evidence supporting the implementation of the policy. POLICY- Work in this area is on-going. The Policy Unit continues to clean-up, improve organization of, and increase use of family-centered/Practice	

		Model language in policy manual and publications. There were three major promulgation filings from July 1, 2012-December 31, 2012 which included several new and revised policies, procedures, publications, and forms including: • POLICY I-A: Division Mission, Practice Model, Powers & Duties • POLICY I-B: Child Welfare Delivery System • POLICY I-C: Division Organizational Structure • POLICY I-D: Division Volunteers • POLICY I-E: Official Record Keeping and Retention Schedule & Access to Official Records • POLICY I-F: Confidentiality • POLICY I-G: Ethical Standards • POLICY I-H: Vehicle and Passenger Safety • POLICY II-A: Assessing Families in Relation to Strengths and Needs • POLICY II-B: Community and Self-Referrals for Supportive Services (and related procedure) • POLICY II-C (and related procedures): Differential Response • POLICY II-D: Child Abuse Hotline for Child Maltreatment Reports • Policy II-E (and related	

		procedures): Assessment of Child Maltreatment Reports • POLICY II-I: Early Intervention Referrals and Services • POLICY VIII-L: Subsidized Guardianship (and related procedures) • Procedure II-E1: County Office Response to the Child Abuse Hotline for Assessments That Are the Responsibility of the Division • Procedure II-E2: Child Maltreatment Report Assessment Interviews • Procedure II-E4: Other Child Maltreatment Assessment Action • Procedure VIII-I8: Payment for Non-Recurring Adoption Expenses and Special Subsidy • Procedure IX-A1: Internal Reviews of Adverse Action • Procedure IX-A2: Appeals and Hearings of Unfavorable Decisions • Procedure IX-A3: Appeals and Hearings of True Child Maltreatment Decisions • Procedure IX-A4: Regular Administrative Hearing Process • Procedure IX-A5: Expedited Hearing Process • Procedure IX-A6: Preliminary Administrative Hearing • Procedure IX-A7:	

		Investigative File for the Administrative Hearing • Appendix 4: Foster Home Records • CFS-100: Differential Response Program Authorization for Release of Information • CFS-101: Plan of Safe Care • CFS-232-T2: True But Exempt Child Maltreatment Investigative Determination Notice to Offender • CFS-435-B: Notification of Subsidized Guardianship Program Denial • CFS-435-F: Subsidized Guardianship Agreement • CFS-435-G: Annual Progress Report and Subsidized Guardianship Agreement Review • CFS-435-H: Notice of Modification or Termination to Subsidized Guardianship Agreement PUB-30: Foster Parent Handbook **PS-**Prevention and Support has started reviewing performance indicators and will add to ALL contracts an indicator that states providers will use best practice and remain ethical when working with our clients. There are also changes to the SAFE Home Studies which affects our	

		contract providers. Contractors must work within the policy when conducting SAFE Home Studies. **CPS**- During the last fiscal year, the CPS unit reviewed the statutory guidelines for initiating and completing child maltreatment investigations. As a result of issues identified during the CPS reviews, several legislative changes were proposed. One proposed legislative change provided a revision to the definition of a caretaker. The revision added Significant Other to the list of eligible offenders for child maltreatment investigations. Secondly, a process was proposed to allow an extension of the timeframe for completing Child Maltreatment investigations. Lastly, new guidelines where drafted to structure the process for taking reports involving Educational neglect.	
Working relationship that are effective and ensure safety of children	6/30/13	DCFS collaborations and partnerships are established to ensure we have the most appropriate policy and guidance for staff. The Training plan sections reflects efforts to build skills of staff and our QA and CQI process strengthen the expectation. **FC**-Development of a voluntary PIP as a result of the IV-E audit. Steps include: DCFS and Licensing unit develop routine meetings to brainstorm and determine policy/law changes necessary to	

		strengthen the oversight of foster care placements. • Strengthening licensing oversight in monitoring of private provider/facility safety checks. • Establishing notification protocols of licensing citation on private providers and facility to DCFS for consideration. • CHRIS enhancements to include tracking IV-E claims more closely related to duplicate board and daycare payments. • Expanding QA unit responsibilities to include monthly IV-E audit activities on a random pull of cases. • Jointly (DCFS and Licensing) presenting at provider meetings and other opportunities throughout the year.	
Evaluate practice model implementation across the state to determine need training, resources, and other supports to integrate into every day practice.	6/30/13	*See SPQI section, policy section, and training plan.*	
Statewide revised casework	6/30/13	The implementation of DR strengthens the values and practice of maintaining children	

process with increased ability and practice in prevention support activities		safely in their own homes. The waiver implementation will create further leverage with the functional assessment, nurturing parenting, and team decision making intervention with their dual focus on safely maintaining children in their own home and well-being of child and family.	
Improved risk assessments and planning for safely keeping children in own home	6/30/13	**SQPI-** The SQPI Unit conducted full QSPRs in Areas 5, 6, 9 and 10 between September 24 and December 21, 2012. The QSPRs assessed and highlighted the strengths and areas needing improvement in practice in each of these service areas. In doing so, the reviews addressed the degree to which each Area was able to provide sufficient services to prevent the removal of children from their families. These reviews also highlighted inconsistencies in casework between in-home and foster care cases so as to address the strong practices upon which the Areas could build and the weaker areas of practice needing shoring up to safely serve children in the family home and prevent their entry into foster care. The QSPRs highlighted the importance of individualizing services to support and foster family preservation. In focusing on tailoring services to meet the individual needs of children and families, the reviews stressed the importance of both formal and informal assessment of need and the provision of relevant services. Generic, “cookie-	

		cutter" services were discouraged, because they do not address the specific needs of individual families. **PS-** DCFS vendors continue to assess family needs based on the NCFAS. The performance indicators were also revised so that services are provided in the home which prevents families from missing work and school. Based on surveys from families, vendors are flexible and services are being provided in their homes at times that are convenient for them. Vendors continue to link families to resources based upon their needs. Surveys from DCFS clients, indicated that they received the services that were needed and as a parent they learned new ways to manage and care for their children. DCFS clients learning the new skills will assist in safely maintain children in their own home. Access to services in some counties in Arkansas is still problematic due to our state being very rural and the number of providers available to service those areas. However, whenever the agency receives a request for services, staff diligently searches for a qualified agency or vendor to provide the service. The vendors have had to travel a distance to get to the families, however the service was provided. **PDU-** As previously noted, Ed Cotton developed and provided, along with co-trainer Chantel Barber, SDM training to non-	

		investigative staff across the state beginning in October. This training focused on understanding the difference between safety and risk; along with the development and use of protection plans when a safety factor has been identified; and promoting the practice of leaving children in their home when safely possible.	
Goal: Develop, Implement, and Monitor a Statewide Practice Model to ensure the most appropriate services are provided to children and families in a consistent manner that lead to positive outcomes.			
FOURTH YEAR	**TARGET DATE**	**STATUS ACCOMPLISHMENT/PROCESS**	**REVISION NEEDED**
Improved assessment of family's needs and access to services to safely maintain children in their own home	6/30/13	**CS-** Differential Response 1st phase counties implemented to assess family needs and locate community services to keep children in their home. Planning for statewide implementation. Meet with DR manager on DR monthly to assist in planning and development.	
Timely and appropriate match for children in adoptive families	6/30/13	**CS-** Explore one worker one child initiative Permanency and Placement Group created Supervision of Adoption staff moved under AD Resource worker assigned to complete both foster and adopt home study to provide more consistency in matching to improve quality and team work to lead to timely adoption	
Continue casework	6/30/13	**CS-**Continued assessment of needs and strategies on how	

process for youth in foster care and ways of measuring success when transition to adulthood		youth can be supported. Assessing and developing NYTD plans monitor with log. Additional NYTD training Monitor and review NYTD data reports to ensure youth are receiving appropriate transitional services. **TYS-** The TYS unit meets with TYS Coordinators on a monthly basis, ongoing training/coaching is provided. The TYS unit also reviews monthly reports from TYS Coordinators to determine whether appropriate services are provided to transition aged youth with consistency throughout the state. **POLICY-** Collaboration between DCFS, the Division of Aging and Adult Services, the Division of Developmental Disabilities, the Division of Youth Services, and the Division of Behavioral Health occurred this past year to revise the existing Interagency Memorandum of Agreement between these divisions regarding individuals who are developmentally/ intellectually disabled and/or mentally ill and for whom the state has served as custodian during childhood and who will continue to require state custody status as an adult or otherwise be in need of DHS services in order to ensure their health and safety as an adult. These revisions occurred to ensure this MOU accurately reflects the availability of services offered by the various divisions and corresponding roles and responsibilities of	

		each division. The intent of the MOU is to strengthen the current system of protective services throughout the state and create a smooth transition and provide adequate time to arrange appropriate placement for the individual turning eighteen (18).	
Improved practice statewide are reflected in the QSPR results	6/30/13	*See attached QSPR results*	
Goal: Develop, Implement, and Monitor a Statewide Practice Model to ensure the most appropriate services are provided to children and families in a consistent manner that lead to positive outcomes.			
FOURTH YEAR	**TARGET DATE**	**STATUS ACCOMPLISHMENT/PROCESS**	**REVISION NEEDED**
Continue to evaluate case progress and make improvements through the development of quality improvement strategies	6/30/13	**CS-**Review of cases for quality, compliance, and best practice to ensure consistency of policy/procedure Complaints – review case – Area Director assessment Review complaints or issues/areas of concern and address with staff as appropriate to determine course of action to improve staff performance **TYS-** The annual TYS conference provides an excellent way to identify the following, by speaking with youth in attendance: • Current Gaps in services • The appropriateness of placements for transition	

		aged youth • The "well-being" aspect of caring for our clients • Adequacy of "Self-sufficiency" skills training being provided by provider **FC-** The permanency team serves as a way to assess continues quality improvement. This year, the team has analyzed data reports related to length of time in care, case plan goals, when established, steps to permanency, and challenges to permanency. Assignments for follow up are made and brought back to team for discussion on what is needed to support the work. **SQPI-** The Service Quality and Practice Improvement (SQPI) Unit conducted both supplemental and full Quality Services Peer Reviews (QSPR) between July 1 and December 31, 2012. The supplemental reviews were conducted during the overlapping year of Arkansas's PIP to determine if the State met the negotiated goals of improvement for Items 18 and 20. The full QSPRs were consistent with Arkansas's normal practice improvement processes. Supplemental reviews were conducted in Areas 1, 2, 7 and 8, while full QSPRs were conducted in Areas 5, 6, 9 and 10. The QSPRs assessed and highlighted the strengths and areas needing improvement in practice in each of these service areas, thus allowing each Area to assess its	

		performance and develop quality improvement strategies. **PS-**The prevention and support unit review CQI and based upon the noted recommendation, changes are made to ensure that clients receive the best service possible.	
Quality Assurance strategies are aligned with state and federal regulations and Arkansas Practice Model	6/30/13	**SQPI-** Following each QSPR, the SQPI Unit drafts a report outlining the findings in which both strengths and areas needing improvement in practice are highlighted. In analyzing the results and developing these reports, the unit assesses conformity with best practice as identified in federal regulations and the Arkansas Practice Model. When appropriate, the unit discusses this analysis explicitly in the reports. For example, both federal guidelines and the practice model purport that children should only be removed from their homes when immediate dangers that cannot be mitigated are present. This is a consistent message in these reports, and that message is plainly correlated to the State's SDM model in the reports as well. **PDU-** Members of the Academic Partnership have requested a tool that crosswalks the QSPR Items, COR elements and the data reports leadership in Community Services use to track program improvements. The PDU Manager has discussed this with the QSPR Manager and hopes to begin work on this in the next quarter.	

Dashboard accessible for data management	6/30/13	There are approximately thirty reports that are monitored routinely for CQI. Examples include: Annual report card, QPR report, Area caseload summary, weekly investigations summary report, overdue open investigations, In-home visits past 120 days, Foster children visit past 120 days, and DYS/foster children contacts in last 30 days by alpha listing.	
Improved QSPR process with involved stakeholders and inter reliability for consistent reviews	6/30/13	**SQPI-** The manager of the SQPI Unit continues to read/review all of the cases evaluated by the reviewers to ensure inter-rater reliability. The manager of the unit discussed with the Director and the planning manager the need to involve stakeholders in carrying out the QSPRs. Given the time constraints brought on by the supplemental reviews and then immediate transition into the full QSPRs, it was determined that it would be best to wait to engage stakeholders in the review process (conducting the reviews) until the next fiscal year (SFY 2014). DCFS Director, the manager of the SQPI Unit and other key members of the Division's executive team meet with the area directors and all supervisors from each service area following their QSPR to discuss the findings and particular strengths, needs and areas needing improvement. Each Area's meta-analysis and investigative review reports are also discussed to produce a comprehensive, area-wide	

		examination.	
Goal: Integrate DCFS practice through communication, professional development and organizational change management to build a child welfare system that keeps children safe and help families; respectfully engages families and youth and uses community-based services and supports to assist parents in successfully caring for their children. The focus will be on the safety, permanency and well-being for all children and youth.			
FOURTH YEAR	**TARGET DATE**	**STATUS ACCOMPLISHMENT/PROCESS**	**REVISION NEEDED**
Effective messaging for community and stakeholders understanding of DCFS role	6/30/13	**CS-**Quarterly training, Judges meetings, and TSDT meetings **TYS-**The TYS unit continually messages the important role of the agency as it relates to transitional youth services to all stakeholders. Specifically to the Junior League of Fort Smith, during the annual TYS conference (YAB State), the Administrative Office of the Courts (AOC), and to the state Youth Advisory Board (YAB) members. **BHS-**The DCFS System of Care Director participates in SOC and CASSP site reviews annually, which includes 10 sites across the state. Her role is to evaluate the level of collaboration occurring at the local level in the SOC and CASSP and provide information and technical assistance to guide field staff in improving practice. This staff also provides formal presentations regarding DCFS issues and needs in various meetings in the state to promote collaboration in developing services and supports for	

		families. Specific data related to child welfare is being shared with the Statewide CASSP Coordinating Council. This data is current and includes information such as the number of children taken into state custody in the past month by county, number of foster homes by county, total number of children in care by county. This information provides a forum for service development and allocation of resources to assist the child welfare system. CASSP and SOC have designated children in the child welfare system as a priority population. **PS-** Prevention staff is scheduled to speak with the State ICC group regarding the unit and services that are provided for DCFS clients on April 17, 2013. Prevention staff will take this opportunity to message DCFS role to ICC stakeholder's state wide. The prevention unit also assist in planning each year for Child Abuse Prevention Awareness month by having press conferences, guest speakers, purchasing newspaper ads and maintaining a website that provide tips on the prevention of child abuse. **ADOPTION-**Our recruitment plan includes involvement of field staff, particularly the Action Plan written as part of the 2012 Regional Roundtables. In that initiative we will select the 100 children who have been waiting the longest for an adoptive placement, review the	

		case, and schedule permanency roundtables to include adoption staff, the county worker assigned to the case, AAL's, CASA, OCC attorneys, and anyone else who has involvement in the case, in order to make decisions on the appropriate goal, possible placements, and needed services. Adoption Manager has met with judges and will continue to do so to address what is needed in the selection process, workloads, recruitment, and feasibility of contacting relatives in some cases. Adoption Manager has met and will continue to meet with Area Directors on these same issues. To further information sharing regarding the impact of the approval of our title IV-E waiver, the Division has developed talking points, emails, and a laminated poster to further reflect the vision of DCFS and the goals for children and families.	
Improved collaboration between courts and DCFS for improved outcomes for children and families	6/30/13	**TYS-** The Transitional Youth Services (TYS) unit collaborates with the Administrative Office of the Courts, Youth Engagement Specialist (YES Team). The DCFS TYS unit along with the Arkansas Youth Advisory Board (YAB) worked with the YES team during the TYS annual conference and with distribution of their annual survey. During the annual conference,	

		the YES team facilitated focus groups, provided workshops and explored how well the courts engaged youth served by the foster care system. The DCFS TYS unit will continue to work with the YES team to assess how well both the Child Welfare and Court systems are serving transition aged youth. DCFS has a good partnership with the Court Improvement staff in the Administrative Office of the Courts, and have participated in meetings, training, and planning retreats. CIP has been involved in the division program improvement planning. There is a monthly meeting at the executive level that meets to problem solve and determine how to improve outcomes with children and families. The division plans to continue this collaboration in the future by ensuring that they are invited and participate in future Child and Family Services Reviews and Program Improvement Plan follow ups. AOC continues to be invited to participate and give input on the DCFS Advisory Board. AOC has invited DCFS to participate in the development of the CIP strategic plan as well as implementation of the training and data technology grants. DCFS and the Administrative Office of the Courts (AOC) are engaged in a project to share client information of mutual clients among each system. As part of the information share, scanned court documents entered in the AOC information	

		system, called DNet (Dependent Neglect) are now available as a pilot in CHRIS. The DNet Court Documents link is on the Court Hearing Detail screen so staff can view the actual Court Order, Admitted Documents, and Shared Documents. There are 7 pilot counties testing this new access. They are: Pulaski, Sebastian, Washington, Benton, Carroll, Lonoke, and Miller. In May 2013, representatives from DCFS and AOC attended a forum sponsored by the National Resource Center for Child Welfare Data and Technology to assist in collaborative efforts for CQI. As a result of this meeting two AOC (their Data Specialist and Court Improvement Coordinator) attend the DCFS Permanency team meetings. **POLICY-**The Pulaski County Zero To Three Court Team Project for Safe Babies continues. This is a systems change initiative focused on improving how the courts, child welfare agencies, and child-serving organizations work together, share information, and expedite services for young children. The local Community Coordinator for the Arkansas Pilot Court Team Project works with Judge Warren to support local Court Team activities by facilitating coordination and collaboration among community stakeholders, scheduling Court Team meetings, and conducting follow-up activities related to Court Team goals. This past year the Court Team Project has	

		been working on developing post-removal conferences and a Parent Partner Program which would involve biological parents who have previously been involved in the child welfare system supporting biological parents who are currently participating in the Court Team Project by helping them to navigate the child welfare system and serving as an additional support to them. Both of these sub-programs should launch in 2013. The Court Team served 16 children from July 1, 2012 – December 31, 2012. Two cases (one with two children, one with one child) closed by reunification during the 3rd quarter, one case (one child) closed by adoption during the 4th quarter. **ADOPTION-** Adoption Manager has met with judges and will continue to do so to address what is needed in the selection process, workloads, recruitment, and feasibility of contacting relatives in some cases. Adoption Manager has met and will continue to meet with Area Directors on these same issues. **CPS-** During the spring of 2013, DCFS Child Protective Service manager worked with DCFS executive staff to draft proposed legislation for the 89th General Assembly. The proposed legislative changes were sent to external stakeholder for review and response. Several meetings	

		were convened with external stakeholders to discuss the proposals. Changes were made to the proposal due to discussions and issues of concerns expressed by the external stakeholder members. Workgroups which include external stakeholder members will be formed to allow for ongoing discussion during the implementation of the new legislative changes.	
Integrate at priority level 2 strategies that support and will sustain the DCFS transformation process	6/30/13	**TYS-** The major activities the TYS unit has lead, is the development of the state Youth Advisory Board (YAB). The YAB is the most important stakeholder to this agency; they provide us with valuable information to assist with the current DCFS transformation process. The YAB also plays a vital role in communicating the transformation of the agency to other youth in care. Well-Being, permanency, and the importance of connecting youth to community resources are continual themes during the annual conference—which is led by the state YAB members! **BHS-** The Inter-Divisional Staffing process, described earlier, provides a forum for identifying systemic issues that impact our ability to provide necessary services and supports. The process involves multiple systems that impact children and families. As systemic issues arise, a plan is formulated to improve the ability of DCFS and other Divisions to navigate through complex organizational	

		barriers that impede transformation of DCFS and outcomes for children. An example is providing training for staff within DYS and DCFS to more clearly understand each Division's roles and responsibilities for dual custody youth especially in regard to transition to adulthood services. **PS**-Prevention unit staff chaired the IVE Waiver committee on Evidence-Based Parenting. The committee reviewed over 20 programs and was able to make a recommendation that would transform DCFS in providing parenting services that would address the needs and increase parenting skills.	
Varied strategies on statewide level for recognition and recruitment of staff-decreased turnover	6/30/13	**CS-**Implementing successes and recognition at Quarterly Supervisors Meetings, Services recognition at statewide meeting, MPCWIC, served on the staff appreciation and recognition workgroup as well as a member of the Project Team, and Provide feedback on site visits. **PDU-** The efforts of the AR CIRCLES Project helps promote staff retention by utilizing a multi-faceted strategy to improve supervision across the state at all levels. The Hiring Workgroup is developing a competency based hiring process. Work to date includes development of competency focused interview questions for FSW hires-including questions that can be randomly selected for individual interviews, The second phase of work focuses	

		on the development of a realistic job preview video. All of the efforts of this workgroup is based on the premise if we hire the right people for the job at the front end, we increase our chances of retaining staff. The Staff Appreciation and Recognition Workgroup efforts also support retention by looking at developing a division program that highlights staff success and accomplishment. The Supervisory Practice Model provides markers of effective supervision that support staff retention, and the Learning Circle model promotes the development of a learning organization by changing the way supervisors interact with staff to address issues at that local level.	
Goal: Integrate DCFS practice through communication, professional development and organizational change management to build a child welfare system that keeps children safe and help families; respectfully engages families and youth and uses community-based services and supports to assist parents in successfully caring for their children. The focus will be on the safety, permanency and well-being for all children and youth.			
FOURTH YEAR	**TARGET DATE**	**STATUS ACCOMPLISHMENT/PROCESS**	**REVISION NEEDED**
Continue to implement and assess and evaluate effectiveness of retention strategies and change as needed	6/30/13	**CS-** We have called staff that have resigned to ask additional questions regarding resignation.	

Goal: Establish an ongoing process that identifies services gaps and implements resource development at the state and local level to address those identified gaps.			
FOURTH YEAR	**TARGET DATE**	**STATUS ACCOMPLISHMENT/PROCESS**	**REVISION NEEDED**
Data reports available to accurately identify resources in local communities	6/30/13	**TYS-** Data reports from "Chris Net" are utilized to determine the number of transition aged youth in a particular area of the state. Additionally when designing programmatic offerings these reports are used. If the agency could develop a specific report depicting the number of transition aged youth attending college—that would be a helpful tool for the TYS unit. **BHS-** The Behavioral Health Unit receives reports weekly from the Medicaid utilization management contractor, Value Options that identifies services approved or denied for foster children. These services include acute psychiatric care, psychiatric residential services and outpatient mental health services. The report is reviewed and emails sent to each case worker with a youth in acute or residential psychiatric facilities. This emails requires a response on several issues, including discharge placement, involvement in the treatment process, visits, etc. The process assists in identifying if discharge planning is negatively impacted by a lack of resources in the community, as well as identifying which areas of the state that are more effectively	

		able to put services in place on a timely basis that appropriately meets the needs of the youth. **PS**-data is used from assessments to determine needed services as well as changes to the performance indicators. **FC-**DCFS has developed reports that identify the number of beds of children in care for each county. Currently, exploring the use of Geo-mapping for recruitment. With the implementation of DR there is some initial work being conducted to assess formal and informal community resources available and how to access in order to build toward an online directory.	
Continue to implement strategies and assess effectiveness of changes made to improve contracts and purchased services for children and families to achieve better outcomes	6/30/13	**BHS-** The mental health specialist has been working with several emergency shelters to improve mental health services in this type of placement. Meetings have been facilitated between the local Community Mental Health Center and emergency shelters to develop on-site mental health services. Contract performance indicators for emergency shelters were changed to require that shelters insure that mental health needs were met for all youth. Previously, the contract only specified "medical" needs. **PS**-DCFS continues to amend and or modify performance indicators to improve contracts and purchased services for children and families to achieve better outcomes. Services are	

		provided at a time that is convenient for the client and in their homes. The effectiveness of change has indicated a decrease in the number of "no shows", more participation and compliance with the treatment plan.	
Goal: Establish an ongoing process that identifies services gaps and implements resource development at the state and local level to address those identified gaps.			
FOURTH YEAR	**TARGET DATE**	**STATUS ACCOMPLISHMENT/PROCESS**	**REVISION NEEDED**
Services developed to meet the individualized based on accurate data reports for families within the local community	6/30/13	**PS-** Services are more individualized, available and convenient for clients. Since more services are provided in the homes of clients, vendors are getting less "no shows", more client participation and able to teach new skills. This is resulting in better outcomes. Surveys from clients stated that their services were scheduled at a time that was convenient for them and they were allowed to work at their own pace. **DR-**As the DR implementation is evaluated, we anticipate the identity of available resources, and gaps in resources for these families. **CPS-** April 11, 2011, the CPS unit started conducting Quality Service reviews of DCFS investigative records. The investigations were randomly selected from each service area. A review instrument was designed to assess each identified investigation, analyzing compliance with policy, completeness of	

		investigative activities, and competent decision making. A process was also developed to allow the reviewer the ability to notify DCFS area supervisors of safety concerns requiring immediate actions. The review process allows the Department the ability to provide an in-depth review of the investigations in the service areas and make recommendations to improve child safety as well as the quality of the child maltreatment investigations.	
Improved stability of placement and decrease in sibling separation and decrease in the utilization of group home living for older youth	6/30/13	**TYS-** The TYS unit continues to stress the importance of "authentic youth engagement" principles to youth as well as agency staff during the annual TYS conference (YAB State). Additionally, the TYS unit provides training to agency staff—to communicate the importance of identifying appropriate housing options for older youth. To that end, the TYS unit, Program Manager has worked with community stakeholders to develop "family-style" living arrangements designed to meet the specific needs of older youth. The TYS Program Manager sits on the Permanency Workgroup. **BHS-** The specialized placement unit has made a concerted effort in the past year to work with Therapeutic Foster Care (TFC) providers to admit siblings in the TFC home when clinically appropriate. Significant progress has been	

		made with our providers on this issue. Many siblings, without significant behavioral health issues requiring TFC are taken into the home, at a regular board rate but services can include sibling relationship issues and maintaining sibling bonds.	
Specialized foster families with experience to meet the individualized needs of children entering foster care and families mentoring new foster families	6/30/13	**FC**: Monthly meeting with resource workers to strengthen their involvement of foster care placement and better match with families. **BHS-** Medically fragile children are a particular challenge to find appropriate placement that can be trained to provide the medical interventions and continuous medical follow-ups. A TFC provider in Central Arkansas has agreed to recruit and develop a segment of their TFC program specifically for medically fragile children. The location in central Arkansas is necessary since most, if not all of the medically fragile children are being treated by Arkansas Children's Hospital in Little Rock. A meeting was held with the provider work through all the logistics of programming and financial issues. A tentative start date for this service is July, 2013.	
Available Adoptive Homes to match all needs of children waiting adoptive placement and decrease in	6/30/13	**CS-**Resource staff assigned to complete. **ADOPTION-** Please see Adoption and Adoption recruitment/retention sections.	

disruption of adoptions			
Goal: Create a systemic approach for data management within DCFS at all levels to justify policy, procedure, and financial changes necessary based on valid data to continually improve the ability to provide the most appropriate services and supports to children and families for positive outcomes.			
FOURTH YEAR	**TARGET DATE**	**STATUS ACCOMPLISHMENT/PROCESS**	**REVISION NEEDED**
Continue to assess and make needed changes to ensure the QSPR process remains aligned with the practice model	6/30/13	**SQPI-** Following each QSPR, the SQPI Unit drafts a report outlining the findings in which both strengths and areas needing improvement in practice are highlighted. In analyzing the results and developing these reports, the unit assesses conformity with best practice as identified in federal regulations and the Arkansas Practice Model. When appropriate, the unit discusses this analysis explicitly in the reports. For example, both federal guidelines and the practice model purport that children should only be removed from their homes when immediate dangers that cannot be mitigated are present. This is a consistent message in these reports, and that message is plainly correlated to the State's SDM model in the reports as well.	
Assess data reports and feedback on accuracy and develop strategies to improve practice with	6/30/13	**CS-**Utilizes reports such as the QPR, QSPR, COR, and Mustang reports. In home and foster care placement reports are reviewed by Area Director and then follow-up is conducted by the Assistant Director. **SQPI-**The Service Quality and	

families		Practice Improvement (SQPI) Unit conducted both supplemental and full Quality Services Peer Reviews (QSPR) between July 1 and December 31, 2012. The supplemental reviews were conducted during the overlapping year of Arkansas's PIP to determine if the State met the negotiated goals of improvement for Items 18 and 20. The full QSPRs were consistent with Arkansas's normal practice improvement processes. Supplemental reviews were conducted in Areas 1, 2, 7 and 8, while full QSPRs were conducted in Areas 5, 6, 9 and 10. The QSPRs assessed and highlighted the strengths and areas needing improvement in practice in each of these service areas, thus allowing each Area to assess its performance and develop quality improvement strategies	
Accurate data management reports for managers and supervisors to focus on items and practices to improve	6/30/13	**CS-**Utilizes reports such as the QPR, QSPR, COR, and Mustang reports. In home and foster care placement reports are reviewed by Area Director then and then follow-up is conducted by the Assistant Director.	
Prioritize and complete when possible due to fiscal capacity CHRIS enhancements necessary for practice model alignment	6/30/13	Each 1st Thursday DCFS executive staff and CHRIS staff has a CHRIS meeting to discuss pending items and determine prioritization and due dates for enhancements. Meeting minutes are taken and those can be reviewed on-site.	
Goal: Create a systemic approach for data management within DCFS at all levels			

to justify policy, procedure, and financial changes necessary based on valid data to continually improve the ability to provide the most appropriate services and supports to children and families for positive outcomes.			
FOURTH YEAR	**TARGET DATE**	**STATUS ACCOMPLISHMENT/PROCESS**	**REVISION NEEDED**
Align process of training on how to access reports and understand the data including the analysis of data with the training system	6/30/13	**PDU-** Updates to the New Supervisor Training, provided by MidSOUTH, include placing a heavier focus on CHRIS data reports. The training uses the same data reports used by Community Services leadership on a routine basis. The proposed OJT program for new supervisors promoted within the division also places an emphasis on the CHRIS reports used by leadership. Work to create a crosswalk tool that ties QSPR, COR, and CHRIS reports is targeted to begin in the next quarter.	
Survey results are utilized to make changes in practices and integrates within the QSPR process for continuous quality improvement and customer satisfaction	6/30/13	DCFS utilizes several strategies to assess the effectiveness of its staff, services, and programs as well as to ensure that those they lead to improved outcomes for children and families. DCFS develops a number of reports, evaluations and other mechanisms to measure the quality of its services. Please see the list of these reports in the evaluation and technical assistance section.	
Goal: Develop, Implement, and Monitor a Statewide Practice Model to ensure the most appropriate services are provided to children and families in a consistent manner that lead to positive outcomes.			
FIFTH YEAR	**TARGET DATE**	**STATUS ACCOMPLISHMENT/PROC**	**REVISION NEEDED**

		ESS	
Practice model change strategy implemented statewide	6/30/14		
Goal: Develop, Implement, and Monitor a Statewide Practice Model to ensure the most appropriate services are provided to children and families in a consistent manner that lead to positive outcomes.			
FIFTH YEAR	**TARGET DATE**	**STATUS ACCOMPLISHMENT/PROCESS**	**REVISION NEEDED**
Report out progress over the last 4 years	6/30/14		
Assess and gather feedback from practice model implementation	6/30/14		
Overall statewide good working relationships with CACD/DCFS/LLE statewide	6/30/14		
Appropriate children are entering the foster care system and increased number of children are able to remain in their own homes with appropriate services and supports with	6/30/14		

positive outcomes			
Evaluate training partnership and professional development	6/30/14		
Goal: Develop, Implement, and Monitor a Statewide Practice Model to ensure the most appropriate services are provided to children and families in a consistent manner that lead to positive outcomes.			
FIFTH YEAR	**TARGET DATE**	**STATUS ACCOMPLISHMENT/PROCESS**	**REVISION NEEDED**
Improved well-being and stability of children in foster care	6/30/14		
Policy supports and is user friendly	6/30/14		
Working relationship that are effective and ensure safety of children	6/30/14		
Continuing to build practice model statewide with improved outcomes for children and families	6/30/14		
Improved outcomes for children and families;	6/30/14		

decreased removal from home			
Children are able to remain home with appropriate plans for safety decreasing the number of children entering foster care	6/30/14		
Goal: Develop, Implement, and Monitor a Statewide Practice Model to ensure the most appropriate services are provided to children and families in a consistent manner that lead to positive outcomes.			
FIFTH YEAR	**TARGET DATE**	**STATUS ACCOMPLISHMENT/PROCESS**	**REVISION NEEDED**
Improved assessment of family's needs and access to services to safely maintain children in their own home	6/30/14		
Improved assessment of family's needs and access to services to safely maintain children in their own home	6/30/14		
Timely & appropriate match for children in adoptive families &	6/30/14		

decreased adoptive disruptions			
Improved outcomes for youth in foster care	6/30/14		
Integrated DCFS/QSPR process to assess compliance outcomes with state and federal regulations and quality casework practice with children and families	6/30/14		
Goal: Develop, Implement, and Monitor a Statewide Practice Model to ensure the most appropriate services are provided to children and families in a consistent manner that lead to positive outcomes.			
FIFTH YEAR	**TARGET DATE**	**STATUS ACCOMPLISHMENT/PROCESS**	**REVISION NEEDED**
QSPR is an effective process with inter reliability to ensure that the division is able to continually improve services and support and families achieve positive outcomes	6/30/14		

Quality Assurance strategies are aligned with state and federal regulations and Arkansas Practice Model	6/30/14		
Dashboard accessible for data management	6/30/14		
QSPR process in place that aligns with Arkansas Practice model and state and federal regulations and is strong in inter-reliability and validity	6/30/14		
Goal: Integrate DCFS practice through communication, professional development and organizational change management to build a child welfare system that keeps children safe and help families; respectfully engages families and youth and uses community-based services and supports to assist parents in successfully caring for their children. The focus will be on the safety, permanency and well-being for all children and youth.			
FIFTH YEAR	**TARGET DATE**	**STATUS ACCOMPLISHMENT/PROCESS**	**REVISION NEEDED**
Effective messaging for community and stakeholders understanding of DCFS role	6/30/14		
Improved collaboration	6/30/14		

between courts and DCFS for improved outcomes for children and families			
Training aligns with practice model case work process to effectively support the education of child welfare policy, procedures and best practices-(how to)	6/30/14		
Organization has supports and strategies in place to sustain the DCFS transformation process	6/30/14		
Varied strategies on statewide level for recognition and recruitment of staff-decreased turnover	6/30/14		
Goal: Integrate DCFS practice through communication, professional development and organizational change management to build a child welfare system that keeps children safe and help families; respectfully engages families and youth and uses community-based services and supports to assist parents in successfully caring for their children. The focus will be on the safety, permanency and well-being for all children and youth.			

FIFTH YEAR	TARGET DATE	STATUS ACCOMPLISHMENT/PROCESS	REVISION NEEDED
Varied strategies on statewide level for recognition and recruitment of staff-decreased turnover	6/30/14		
Goal: Establish an ongoing process that identifies services gaps and implements resource development at the state and local level to address those identified gaps.			
FIFTH YEAR	**TARGET DATE**	**STATUS ACCOMPLISHMENT/PROCESS**	**REVISION NEEDED**
Data reports available to accurately identify resources in local communities	6/30/14		
Appropriate, Available, and Accessible and Quality services are available to children and family services to achieve positive outcomes	6/30/14		

Goal: Establish an ongoing process that identifies services gaps and implements resource development at the state and local level to address those identified gaps.			
FIFTH YEAR	**TARGET DATE**	**STATUS ACCOMPLISHMENT/PROCESS**	**REVISION NEEDED**
Accessible, available and quality services to meet the needs of families at the local level	6/30/14		
Improved stability of placement and decrease in sibling separation and decrease in the utilization of group home living for older youth and reassess strategies	6/30/14		
Specialized foster families with experience to meet the individualized needs of children entering foster care and families mentoring new foster families including peer mentoring	6/30/14		
Available Adoptive	6/30/14		

Homes to match all needs of children waiting adoptive placement and decrease in disruption of adoptions			
Goal: Create a systemic approach for data management within DCFS at all levels to justify policy, procedure, and financial changes necessary based on valid data to continually improve the ability to provide the most appropriate services and supports to children and families for positive outcomes.			
FIFTH YEAR	**TARGET DATE**	**STATUS ACCOMPLISHMENT/PROCESS**	**REVISION NEEDED**
Effective QA process in place that includes various strategies	6/30/14		
Assess data reports and feedback on accuracy and develop strategies to improve practice with families	6/30/14		
Accurate data management reports for managers and supervisors to	6/30/14		

focus on items and practices to improve			
Continue to prioritize and complete CHRIS enhancement when possible due to fiscal capacity to further alignment with practice model	6/30/14		
Goal: Create a systemic approach for data management within DCFS at all levels to justify policy, procedure, and financial changes necessary based on valid data to continually improve the ability to provide the most appropriate services and supports to children and families for positive outcomes.			
FIFTH YEAR	**TARGET DATE**	**STATUS ACCOMPLISHMENT/PROCESS**	**REVISION NEEDED**
Training system include training on how to access reports and understand the data including the analysis of the data	6/30/14		
Survey results are utilized to make changes in practices and integrates within the QSPR process for continuous quality improvement and customer	6/30/14		

satisfaction			

AREA DIRECTORS STRATEGIES AND ACTIVITIES FOR JULY 1, 2012-JUNE 30, 2013 FOR FIELD

Each area director reports on the steps in implementing the continuing program improvement strategies in their area. Their reports provide detail related to the PIP strategies to enhance DCFS services which supplements the accomplishments provided in the matrix above.

AREA 1 DIRECTOR-BRENDA RICHARD

Assess status of each County practice model:

- Multiple meetings e.g. supervisors meetings, county supervisor meetings, office staff meetings, individual case staff meetings, IV-E partnership meetings, adoption case staff meetings, sibling placements, and more are held monthly to communicate policy updates, best practice procedures, ensure timely adoptions, address services to families/children, and safely maintain children in their homes when possible.
- Professional behaviors, skill based trainings, COR, and partnering with families/stakeholders are additional topics addressed during meetings with supervisors and staff.
- Five supervisors participate in SOC committee meetings to increase community involvement with families and encourage families to participate in the decision making process. Monthly supervisor and quarterly staff meetings are scheduled six months in advance. MidSouth Training Academy and IV-E partners collaborate with DCFS by providing training opportunities, meeting space, and support.

Continuing shift in the number of children entering foster care and increase in the number of children being supported in their own homes:

- Structured Decision Making continues to be promoted with all area staff to address safety factors versus risk factors when assessing removal of children from their care givers. In-home cases continue to increase. However, the number of children entering foster care has increased as well due to increased substance use/abuse and incarcerations of care givers.

Training partnership is repositioned and providing effective support to field:

- Area Director meets monthly with IV-E partner to discuss training needs of area staff, new worker OJT needs and support. Needs to support DCFS activities such as foster parent conference and supervisors' retreat, are addressed as well. IV-E partner develops plans to support Area 1 DCFS needs during meetings. IV-E field trainers continue monthly mediation meetings with Benton County supervisors to enhance teamwork and professionalism among those staff. As a result supervisors increased collaborative teamwork among units as they gained better understanding of the overall practice model and goals of each unit.
- Training partners participated in ODT teamwork training with area staff. Effective means of promoting positive moral among staff was developed in one learning circle. IV-E partner set up opportunities for area staff to present information to college classes in effort to recruit new staff. This increased the number of interns in Washington county office the past two semesters.

- MidSouth Training Academy partnership worked with Areas 1 and 2 to revise new worker training schedule which appeared to enhance new staff's ability to retain information learned in classroom setting by allowing more consecutive days for on the job training.

Continue analysis of policy:

- Area 1 staff are continuously encouraged to communicate how policy affects best practice. Information concerning policy clarification or manual updates was communicated to the policy staff. Area Director continues to advocate for much needed changes in criteria for what constitutes allegations of abuse and/or neglect. For example, recommendations were discussed with executive staff to set time frames on specific allegation of CA/N as means of reducing duplicate work, reducing the number of referrals received that do not constitute current alleged abuse/neglect to a child, and to attempt to delete some allegations such as head lice or educational neglect which should fall under the jurisdiction of schools, FINS, and public health arenas. We have requested updates in the policy manual to comply with current policy changes.

Continue strengthening CACD/DCFS/LLE relationships:

- Washington County staff provided mandated reported training to one of their local law enforcement departments to increase LLE's compliance with this law and as a means to strengthen our relationship with them. Mandated reporter training was also provided to Adult Probation staff. Washington County staff are continuing to participate in Mandating training that is presented by their local Safety Center staff to increase ongoing communication and support to CACD as well as the community. All counties meet one or more times monthly with CACD and LLE during MDT case meetings. Special meetings can be called by any agency involved with MDT to address concerns on cases. Area Director and Washington County Supervisor serve on the local citizen's child death review panel along with law enforcement personnel and CACD supervisor. During these meetings we collaborate on how our agencies can work together to increase safety for the county's children. During the December meeting, the DCFS Area Director promoted the use of Safe Sleep flyers by all agencies as a means of educating the public about infant safety. Area Director participated in the state level meeting between CACD and DCFS to address changes in procedures and MOU between our two agencies. Area staff were made aware of policy and procedure changes for CACD investigations. Area DCFS staff continued to support CACD through responding timely to safety assessment requests**.**

Improved assessment of families needs and access to services to safely maintain children in their own home:

- Benton County DCFS staff were placed under a practice improvement plan to increase timely services to families and children which included increasing home visits and timely case plans. Supervisors designated specific times each week to meet with FSWs to staff every case for safety issues and needed services. This is a continuing practice throughout the area. Structured Decision Making has been embraced by all staff. For the most part, this has helped staff determine when children can be safely maintained in their own home. Families actively participate in the development of case plans, which strengthens and supports the family toward problem-solving. Investigators continue to make service referrals to families and provide immediate concrete services during the investigation process to safely maintain children in their own homes. Protection plans are implemented when it can help a child remain safely in their home. The practice of face-to-face case

transfer staff meetings are ongoing to increase staff's knowledge of a family, services rendered and/or needed, and to increase more timely service delivery.

- Staff also utilize community stakeholders to help safely maintain children in their own homes e.g. System of Care, counseling services, CASSP, and more.

Timely and appropriate match for children in adoptive families:

- Area 1 assumed responsibility of supervision of adoptions at the beginning of December 2012. Adoption staff utilizes the state data match bank and reviews adopt applicant's information in attempt to make timely and best match for children.
- Adoption staff and resource staff meets with the C.A.L.L. for special recruitment of adopt/foster parents. They discuss specific needs and developed a process of completing applications more timely as well as getting information to DCFS. Resource staff met with State C.A.L.L. liaison and director to review the whole application process and MOU. Changes were made to the application process to increase applicants' timely completion of paperwork. The C.A.L.L. has monthly support groups for are foster parents.

Continue casework process for youth in foster care and ways of measuring success when transition to adulthood:

- Area 1's TYS program includes a PA and an FSW who carries a caseload of youth 18 and old. Staff ensures youth have email addresses to encourage them to participate in NYTD surveys during care and after exiting foster care. The area has monthly ILP classes for youth 14 and over that addresses items such as budgeting. Purchase of laptops for our youth and college recruitment tours are also provided to our youth. Our youth are encouraged to participate on the YAB Board meetings. Area Director and multiple area staff attended and participated in the youth conference this past year. Benton County hosted a speaker from Bacone College out of Oklahoma to speak with our staff and youth. This college provides free tuition for children.
- Our TYS staff worked with one foster youth to enroll in the military and another to attend welding school to help increase each one's likelihood of transitioning to successful adulthood. We recently partnered with CASA to develop additional resources and supports for our TYS program. CASA applied for and received a Federal grant to hire staff solely for this program. Area Director meets quarterly with CASA to address TYS needs and how CASA can help meet many of those needs. CASA is looking at helping locate meeting places for ILP classes, sponsor speakers for the classes, and provide incentives for youth to attend.
- Area also collaborated with our local mental health agency toward the development of a group home for foster youth (girls) 18 and over with serious mental health problems. The group home will assist these youth in transitioning successfully to adulthood through the provision of multiple services such as ongoing counseling, psychiatric care, medication management, educational opportunities, accessing public transportation, help looking for and applying for employment. When the youth has successfully completed the group program, he or she is eligible to transition to more independent living arranged through an apartment provided by the local mental health provider.

Continue to evaluate case progress and make improvements through the development of quality improvement strategies:

- Weekly case plan staff meetings continue to be held between FSW and supervisor. On more difficult cases, Washington County held meetings to brainstorm strategies to improve case progress and services needed. Plans are in the development stage to

increase this practice on an area-wide level so that all four counties will have the opportunity to critically review specific cases with their peers toward improved client outcomes.

Effective messaging for community and stakeholders understanding of DCFS role:

- Stakeholder meeting was held in 2012 to educate community partners about Differential Response. Continued messaging of the DR program as well as other DCFS roles has been accomplished during stakeholder meetings such as Quarterly Judge's meetings, MDT's, SOC and CASSP. Continued meetings with partners and courts are scheduled.

Improved collaboration between courts and DCFS for improved outcomes for children and families:

- Quarterly judges meetings are held to address concerns in court and educate court staff on agency changes, new programs, etc.
- Office of Policy and Legal Services supervisor attended the Washington County quarterly judge's meeting at the request of the area director to address Youth Bridge contract and services as a means to decrease the court opening PS cases stemming from FINS hearings.
- Benton County set up file boxes for ad Litems and increased scanning/emailing of documents to court staff to increase timely communication between our agencies.
- Case plan staff meeting dates are being scheduled during court hearings to improve collaboration between DCFS and court personnel. Benton County designated Fridays for these meetings.
- Area Director and some supervisors are scheduling meetings with judges to apprise them of new programs and changes in procedures to increase communication.

Integrate strategies that support and will sustain the DCFS transformation process:

- Area continued partnering with ODT to build/maintain professionalism through learning communication styles and to respond to others.
- Increased communication from Central Office to frontline staff is being accomplished during quarterly meetings, county meetings, and email to keep staff aware of agency strategies and changes.

Varied strategies on statewide level for recognition and recruitment of staff-decreased turnover:

- The area celebrated our PIP achievement at a quarterly staff meeting through recognizing individual achievements of several staff. Attendance by the agency director and several executive staff supported staff's recognition on helping obtain this significant achievement. Supervisors weekly recognize individual staff for their efforts toward best practice through emails, face-to-face communication, and office meetings. Prizes are awarded to staff who have displayed best practice examples during some office meetings. Supervisors have increased their availability and support to staff.
- Identifying individual strengths, retention of staff, team building, and cross staff collaboration were educational topics presented during our supervisors retreat sponsored by our University partners and MidSouth. Supervisors participated in team building activities and were recognized for their accomplishments through certificates and verbal accolades.
- IV-E partner set up opportunities for area staff to present information to college classes in effort to recruit new staff. This increased the number of interns in Washington county office the past two semesters. Washington County supervisors provide field experience

and support to Social Work interns in their office. Placement of interns is being expanded to include other local colleges and counties as a means of recruiting staff. Area Director and Benton County are currently collaborating with JBU toward placement of an intern at the Benton County office for this coming summer.

- Washington County staff participated in a Volunteer Fair sponsored by Wal-Mart to recruit volunteers for our local county offices. Volunteers support staff by providing transportation services and filing.
- An annual foster parent conference is developed by our resource staff to recognize foster parents and staff for their diligent efforts in providing services to clients. Continued education hours are provided during the conferences.

Continue to implement and assess and evaluate effectiveness of retention strategies and change as needed:

- The area's main goal has been to increase supervisors' knowledge and skills so that staff are supported resulting in effective staff retention, skills, service delivery, and future leaders. Through continued partnering with ODT in the education of teamwork and professionalism along with continued support through our university partners, an increase in support to frontline staff has resulted in an improved stabilization of staff in three of the four counties.
- Supervisors are expected to have an open door policy so that any worker can seek guidance as needed from any supervisor. Supervisors assess workers' skill levels and continue to work toward increasing skill levels through coaching, educating, supporting, and referring for training their staff as needed.
- Staff are being re-allocated to different units to help match their skill level to the most appropriate job function.

Data reports available to accurately identify resources in local communities:

- Our university partnership developed a website that helps staff identify local community resources. Area Director actively participated on the NW AR Children's Shelter 5 year planning board. Data reports were used to help identified trends with placement needs and services.

Continue to implement strategies and assess effectiveness of changes made to improve contracts and purchased services for children and families to achieve better outcomes:

- Area Director and financial staff meet monthly with one of our counseling contract providers to assess and address area needing improvement so that services for children and families achieve better outcomes. To increase communication from the provider to staff and court in area of treatment service delivery, area director will develop a report template for the contract provider. Improved case planning, services, and permanency are the expected outcomes of improved information from the provider.

Improved stability of placement and decrease in sibling separation and decrease in the utilization of group home living for older youth:

- Area 1 DCFS partnered with our local mental health provider toward the development of in-home counseling services for children in their foster care provider homes to increase stability of placement through educating foster parents about the specific mental care and needs of children in their home. The program piloted in Washington County and transitioned area-wide by January 2013. We are looking at increasing the program as means of improve the quality of care to foster children and foster parents. We also

targeted specific trainings for our foster parent's e.g. correct completion of TR-1, fire safety.

- Area also collaborated with our local mental health agency toward the development of a group home for foster youth (girls) 18 and over with serious mental health problems. This population has an increased tendency toward homelessness after exiting foster care. To increase this population's placement stability and progress toward successful adulthood, the group home will assist these with access to multiple services such as ongoing counseling, psychiatric care, medication management, educational opportunities, accessing public transportation, help looking for and applying for employment. When the youth has successfully completed the group program, he or she is eligible to transition to more independent living arranged through an apartment provided by the local mental health provider.

Specialized foster families with experience to meet the individualized needs of children entering foster care:

- Resource staff are collaborating with the C.A.L.L in the area of recruiting specialized foster parents to meet the individual needs of area foster children.

Available Adoptive Homes to match all needs of children waiting adoptive placement and decrease in disruption of adoptions:

- Resource staff and adoption staff actively pursue adoption applicants through increased communication efforts. Disclosures with potential adoptive parents are thoroughly completed with therapists frequently present during meetings to address questions the family may have.

Assess data reports and feedback on accuracy and develop strategies to improve practice with families:

- Area staff continuously assess data reports for accuracy and provide feedback on needed improvements. The area developed a sibling report and adoption report that became the standard forms state-wide. Our monthly reports outline multiple changes needed with reports. Staff regularly review cases for client duplications and clean up data as needed. Area Coordinator wrote field guide for how to monitor trust accounts.

Accurate data management reports for managers and supervisors to focus on items and practices to improve:

- CHRIS net reports area utilized by supervisors to assess areas needing improvement. Reports such as the monthly visit report are helpful, but need changes to accurately capture information**.**

AREA 2 AREA DIRECTOR-LISA JENSEN

Assess status of each County practice model:

- Each county in Area 2 has identified areas of focus and try to improve performance in each area by staying in line with the Practice Model. Utilizing appropriate community partners for services, making referrals for IFS, counseling, drug assessments and treatment, providing parenting instruction in classroom setting and 1-1 as needed, providing transportation for visits to maintain connections for children with their families, etc.
- Franklin County is utilizing the Learning Circles approach to address county issues and staying in alignment with the Practice Model.

- Counties are teaming to close out overdue investigations, placements with relatives are increasing, changes are occurring in the adoption unit by utilizing new workers as assistants to assist the adoption workers with visits and paperwork to expedite finalizations. Also the resource unit has taken on the responsibility of opening Adopt Only Homes and ensuring these homes are opened timely.
- County staff have been engaging and educating community partners regarding the Agency Mission and requirements of Mandated Reporting. Franklin, Crawford, and Yell counties regularly participate in SOC/ CASSP.

Continuing shift in the number of children entering foster care and increase in the number of children being supported in their own homes:

- Area 2 staff are utilizing IFS services to maintain children in their homes. Area 2 also places children with relatives when appropriate, either through provisional placement or temporary custody.
- Workers are beginning to utilize the SDM to assess safety issues and put appropriate safety/ protection plans in place in order to allow children to remain safely in their homes. PS workloads have been reduced so workers have more time to work with their families.
- Staff also utilize community resources to assist in service delivery and monitoring for safety.

Continue analysis of policy:

- Provide recommendations for policy updates as see fit.

Continue strengthening CACD/DCFS/LLE relationships:

- Six counties in Area 2 have MDT meetings on a 1-2 time monthly basis. Scott County is in the formation stages for their MDT. Sebastian County has child death review panel that involves many of the community partners including prosecuting attorney, law enforcement, EMS, health department, CACD, DCFS, etc. Other counties in the area are being brought into the panel as children need to be reviewed from the other 6 counties. DEC is coming to Yell, Scott, Logan, Franklin and Johnson counties, trainings are being scheduled.

Improved assessment of families needs and access to services to safely maintain children in their own home:

- Mentoring of new staff to ensure quality assessments, SDM training and implementation in the field, ongoing assessments at every encounter with the family, improve number and quality of home visits.

Timely and appropriate match for children in adoptive families:

- Adoptions has just reverted to Area direction. Cases have been staffed; coordinate efforts to get packets completed for subsidy and legal work in order to complete adoptions more timely.
- All adoption staff will utilize the matching system in CHRIS to identify appropriate families for children needing permanent homes. Additional resources: Adoption Coalition, CALL, Heart Gallery.

Continue casework process for youth in foster care and ways of measuring success when transition to adulthood:

- Area 2 continues to provide services to youth while in foster care and after care services for youth who age out. Weekly training classes are held across the area. There is a

mentor program developed for the youth who are in college or who have moved out on their own.

Continue to evaluate case progress and make improvements through the development of quality improvement strategies:

- Learning Circles
- Supervisory case reviews
- Staffing individually with workers to determine how family is progressing and what additional services are needed to help the family achieve their goal.

Effective messaging for community and stakeholders understanding of DCFS role:
Messaging is done in several venues. Here are some examples:

- MDT meetings
- SOC meetings
- Meetings with CASA
- Adoption Coalition Meetings
- Judicial Improvement Projects
- Speaking engagements
- Community groups

Improved collaboration between courts and DCFS for improved outcomes for children and families:

- Johnson County has quarterly meetings with their Judge to address issues and improve communication and collaboration.
- Crawford County has a court improvement project.
- Other counties meet with Judge as needed to address issues.

Integrate strategies that support and will sustain the DCFS transformation process:

- Supervisory Practice Model
- MPCWIC workgroups – several supervisors have participated and will participate in future workgroups; Learning Circles in Franklin County;
- IV-E Partners meeting monthly to strengthen supports to new staff and existing staff
- Trainings are developed as needed at the request of the Area Director
- Area Coordinator supports all counties and participates in community activities

Varied strategies on statewide level for recognition and recruitment of staff-decreased turnover:

- Looking at ways to modify the new worker training so that it provides the most relief for existing staff, as well as providing a solid environment for new staff to have varied OJT experiences.
- Celebrate birthdays, anniversaries, exceptional work, letters and emails of appreciation to staff, certificates for years of service or good works done, provide food at trainings, increase mentoring support for new and existing staff.

Continue to implement and assess and evaluate effectiveness of retention strategies and change as needed:

- Ongoing discussions and evaluation of modified training utilizing staff input
- Monthly meetings with IV-E Partners
- Quarterly meetings with trainers and foster parent recruiters/trainers
- Increasing support when/where needed
- Request Advanced Practice Education (APE) for staff as needed.

Data reports available to accurately identify resources in local communities:

- IV-E Partnership developed and presented a provider workshop for Area 2 staff with a resource notebook provided to each staff member in the area.
- SOC has an on-line resource directory that staff can access.
- C.A.L.L. and Resource staff meet monthly to look at new foster homes in training and assess homes needed to focus recruitment efforts, etc.
- STEPS provides visitation center for Sebastian County families
- Adoption Coalition opened a visitation center in Alma for Crawford County families.

Improved stability of placement and decrease in sibling separation and decrease in the utilization of group home living for older youth:

- C.A.L.L. and DCFS continued recruitment for homes that can take sibling groups and address the population of children entering care.
- Increase in provisional foster homes across the area.
- Twice monthly staffing of siblings that are separated in order to find appropriate homes to reunite siblings.

Specialized foster families with experience to meet the individualized needs of children entering foster care:

- Making application to TFC and residential treatment as needed to meet the behavioral and emotional needs of children in care.
- Providing support through counseling and on-going training for foster parents to meet the needs of the children placed in their homes to minimize disruptions.

Available Adoptive Homes to match all needs of children waiting adoptive placement and decrease in disruption of adoptions:

- Radio announcements
- Increase awareness in community with Pin Wheels for every child awaiting adoption
- Recruitment through DCFS and the C.A.L.L.
- River Valley Adoption Coalition supports and community awareness campaigns
- A Place to Call Home

Assess data reports and feedback on accuracy and develop strategies to improve practice with families:

- Supervisors utilize the COR reports, 120 day reports for PS, FC, and parent home visits, as well as other reports to monitor compliance. The reports tend to be accurate based on what is documented in the computer, still working with staff to ensure documentation is entered properly and that clients are end dated when appropriate or merged to eliminate duplicates.

Accurate data management reports for managers and supervisors to focus on items and practices to improve:

- Supervisors relay concerns about accuracy to AD or CHRIS Support so updates can be made, or supervisors can determine how information needs to be input so it is captured correctly.

AREA 3 AREA DIRECTOR-JENNIFER WUNTSEL

Assess status of each County practice model:

- Garland has been an active participant in Learning Circles over the last few months. With these monthly unit meetings staff members have become actively involved in comes up with area in the county that need improvement and working together to achieve a plan

of action. This has improved relationships and helped to implement some important changes such as staff recognition, partnering with other agencies to decorate a room for family visitation at a Parenting Center, and working better as teams within DCFS.

- Garland has also been working to prevent opening FINS cases through the court. The judge is now allowing for staff to do assessments for services when not an emergency situation. This is helping to reduce numbers of court ordered FINS cases.
- Saline County has implemented DR in the county. This is beneficial to families who are able to be approached more from a family assessment and offering of services rather than approaching through an investigative mode.
- Hot Springs County has struggled this year due to staff turnover. Neighboring Counties have demonstrated teamwork by assisting with investigations and some home visits for the county.
- Pike and Howard County was recently able to get a new supervisor whom is working diligently to review cases and ensure services are being offered in the county. Surrounding counties are supporting Pike and Howard County in service delivery to families.
- Montgomery and Polk- The supervisor implemented staffing days for court ordered cases in order to staff the cases 2 weeks before court to address any areas of concern prior to the court hearing.
- Area 3 currently has only two counties with specified investigative units. AD is working to obtain another supervisor position in order to hire another investigative supervisor. Once this is done the Area will have 3 separate investigative units who will cover only investigations. AD believes this will improve the quality and timeliness of investigations within the area.
- IFS services are being offered when necessary to try to prevent removal of children. Also staff trained in Structured Decision making are utilizing the Health and Safety Factors Checklist prior to removal of a child.

Continuing shift in the number of children entering foster care and increase in the number of children being supported in their own homes:

- When possible Intensive Family Services are offered to families to prevent foster care placement. Garland County which had high number of children that entered foster care through FINS have worked with the courts to allow assessments on FINS cases when possible prior to court ordered foster care to allow services to be provided in the home to families. In situations where children have to be placed in care, Area 3 looks for possible provisional placements to allow children to be temporarily placed in relatives homes while working to provide reunification services to families.

Continue analysis of policy:

- During Area Supervisors monthly meetings new policy is handed out and discussed with supervisors in the Area. Supervisors are then to pass out and discuss new policy and monitor its implementation with their field staff. When requested, AD provides feedback on policy drafts prior to the policy being promulgated. When staff mentions that changes in policy are needed to better serve families, AD sends these revision requests to the DCFS Policy Administrator to review.

Continue strengthening CACD/DCFS/LLE relationships:

- Area 3 staff participate in MDT meetings and work together with CACD and LLE on joint cases. Area 3 staff continue to provide safety responses on cases where CACD is primary and in need of a safety assessment on children in the investigation.
- The agency staff respond to request from Local Law enforcement if called to assist and LLE also assist the agency on investigations when needed.
- AD attended a joint state meeting with CACD and DCFS on November 14th to discuss changes in the agreement and to work together to partner better on cases that are assigned primary to CACD but may need assistance from DCFS. Area Supervisors have been asked to share with AD any problems or concerns they have with CACD investigations or MDT meetings so that we can work to resolve and bring about better outcomes to families served.

Improved assessment of families needs and access to services to safely maintain children in their own home:

- Area 3 staff are being trained on Structured Decision Making which sets out criteria to be met prior to children being placed in foster care by DCFS.
- Saline and Perry County has already implemented Differential Response and are working to provide preventative services to lower risk families and linking them to local community resources. In the next few months all counties in Area 3 will be implementing the DR assessment process for those cases which meet the criteria.

Timely and appropriate match for children in adoptive families:

- Adoption Staff were placed under the Area Director's supervisor in December 2012. Monthly meetings are now being held with the Area Director, Adoption Supervisor and the Adoption Staff to address areas of concern including making diligent efforts to locate adoptive homes for children without adoptive placements. The initial focus is to determine if any children have a foster home wanting to adopt and to make these the top priority.
- Area 3 has directed that a Data Match search be done at least quarterly on any child waiting for an adoptive placement in which a home has not yet been identified. These data match attempts are to be documented in CHRIS. For hard to place children who have been waiting on adoptive placements for a significant time, Area 3 will be working on setting up staffing's in some cases and Permanency Roundtables to discuss possible adoptive placement options with individuals who have been involved in the life of the child and to determine recruitment efforts.

Continue casework process for youth in foster care and ways of measuring success when transition to adulthood:

- The Transitional Services Worker in Area 3 attempts to maintain contact with youth who have remained in care past age 18 and those who have chosen to leave care until the age of 21. Many who have left care have opened After Care cases in which to utilize funding available for housing and start up items. Some youth chose not to maintain contact or receive any services upon leaving foster care and others still maintain contact over the age of 21 for various reasons.

Continue to evaluate case progress and make improvements through the development of quality improvement strategies:

- Area Director has directed all supervisors to have a minimum of monthly case conferencing with workers to discuss cases and progress in each case. These case

conferences are to be documented in CHRIS to discuss any corrective actions or service needs addressed between the supervisor and worker. Supervisors will continue to do the quarterly supervisor reviews and discuss the reviews with the staff. The Area Director is hiring a Program Coordinator who will be responsible for doing some reviews of cases to determine compliance and quality of service delivery. Cases that will be reviewed initially will be those open cases that continue to receive investigations, PS cases opened over 6 months, cases with complaints received by the governor's office and open cases involving child death. Additionally, Area 3 Program Coordinator will send out CHRIS net reports to staff to show cases which need home visits, case plans etc.

Effective messaging for community and stakeholders understanding of DCFS role:

- In Saline County the CCC/SOC meetings ar held monthly and DCFS staff participate. There is a very good rapport in getting WRAP meetings scheduled and getting services quickly to foster children, PS children and parents.
- The Counseling Clinic is partnering with DCFS and other agencies in getting a mentor program together for teens. Meetings/trainings will be planned at the first of the year. There will be different expections/trainings for foster care/probation officer programs. In Garland County, the SOC the following issues were addressed and each representative has partnered and 3 new committees have been developed that include: Mentoring Committee, Peer to Peer Committee and The Finance Committee. The committees are designed to discuss ideas and implement services to support families and those in the community that are at risk for foster care. The Peer Committee coordinated a Harvest Festival to allow parents, children and community leaders to meet and provide information about the services that are provided through the various agencies. The CCD also announced that a new position has been approved for a Family Service Assistant to go into the home and assist with services as needed. However, the new FSA will serve 5 counties and their caseloads will be assigned to meet the needs of families that are in crisis and need one on one intervention services.
- AD spoke at a Conference for Court Administrative Assistance on October 17, 2012 about reporting to the child abuse hotline, new DR reports, and structure and organization of the agency and duties for various staff. This was to assist court personnel in better understanding DCFS roles and responsibilities. Other supervisors provide in services to school staff and others as requested to provide information to partners.
- Most County have local MDT meetings in which DHS represents the agency on joint cases. There are local collaboartiv efforts also going on with DCFS and their partners who assist families on an ongoing basis.

Improved collaboration between courts and DCFS for improved outcomes for children and families:

- Some Counties in Area 3 have judges meetings in which staff and the judge meet to address any areas of concerns. The goal would be to request that OCC ask each judge if they would be interested in having these meetings on a regular basis if not already doing this in their county. Garland County has some informal meetings with the judge and her staff to help with building relationships between the court and DCFS. Once a month DCFS staff and the juvenile court have a breakfast where they discuss FINS and probation, Every other week there is a meeting between the investigators and with juvenile staff MDT, multiple disciplinary team, where they discuss priority 1'. Every three months she has a quarterly meeting. Every three months she has 'claps, snaps and

pats hosted by the courts specifically for DHS appreciation, where the court feeds DCFS employees.

Integrate strategies that support and will sustain the DCFS transformation process:

- Area 3 has begun Learning Circles in two Counties and all counties will be starting these meetings with staff once trained as facilitators. Area supervisors attended the Quarterly Supervisor Meeting in which they received the Supervisory Practice Model Handbook to assist them in understanding the agency's move towards having a more standardized process in supervision.
- DR has also started in two counties and other counties will be trained and implemented in the remaining counties in the next few months. This is a more family friendly approach to low risk cases which will allow assessment to determine service needs. This will allow more immediate services up front to the families so that community referrals can be made and reduce the amount of time DCFS needs to be involved with the families on lower risk cases.

Varied strategies on statewide level for recognition and recruitment of staff-decreased turnover:

- Garland County has weekly staff meetings to discuss topics of concern. They are also involved in Learning Circles in each unit to address areas of practice identified by each Unit that they would like to implement changes. On Fridays, all DCFS staff wears their DHS purple shirts to show good team spirit. Supervisors bring lunch and goodies to staff at least monthly. Garland has also implemented a monthly birthday party in which they have cake for any employees who have had a birthday during that month. Each month a new worker is recognized as worker of the month and they do a write up summary on that employee and do a recognition of them in front of their peers. The investigative supervisor in Garland is also assisting staff with high workloads on investigations so they will be able to get these done timely.
- Hot Springs County also works with staff to have weekly meetings. At these meetings, staff have input and can ask questions/give comments. They also have a chance at the end of the meeting to ask questions/bring up concerns. The supervisor in this county practices an open door policy to allow staff to ask questions without being shamed for "not knowing" something. Supervisor allows staff's concerned to be included in the monthly report so that anything that they feel needs to go up the chain will be submitted.

Continue to implement and assess and evaluate effectiveness of retention strategies and change as needed:

- In Area 3, AD has allowed some staff to change to different job duties as requested and appropriate when other duties become available. This allows staff to have a change when needed and reduce burnout which in the long run assists with retention of staff. AD has encouraged supervisors to recognize staff when they are doing a good job and several supervisors have implemented monthly recognition for staff. Due to high workloads in some areas there is still job turnover and supervisors are working diligently to get hiring done so that there will be assistance to staff. AD has arranged for neighboring counties to provide assistance in counties where there was turnover and high workloads.

Data reports available to accurately identify resources in local communities:

- There is not anything currently in Area 3 that identifies all resources in the Community. Each county is familiar with their local resources but other counties in the Area may not be aware of nearby resources in other counties outside of contracted services. There is

Esources which can be accessed through DHSshare site which shows several area services and the 211 website by United Way which have statewide resources. AD recently learned about this website and will share with area supervisors at the next meeting. There is also a Statewide DCFS Committee that AD is on which is addressing Networking and Online Resources. This committee is working on addressing the need for a statewide online directory which will make accessing services for DCFS workers an easier process.

Improved stability of placement and decrease in sibling separation and decrease in the utilization of group home living for older youth:

- AD is completing a monthly sibling placement report to identify all foster children that are separated. Sibling separation is discussed with supervisors during monthly supervisors meetings. Supervisors are to staff with their workers monthly to address efforts being made to place siblings together when appropriate. Resource Staff are working on foster home inquiries to try to get homes opened as quickly as possible. AD has asked that County supervisors look at separated siblings when new homes open in their county to determine if new homes could take sibling groups so they can be placed together. AD is also on a workgroup that has just started to discuss possible implementation of new strategies for worker to use to focus on placement stability for children who have disrupted placements**.**

Specialized foster families with experience to meet the individualized needs of children entering foster care:

- *Recruitment*- In smaller counties in the area, Resource staff are actively recruiting for new homes by working at local community events, visiting churches when possible and trying to access media for recruitment of homes. Some of the rural areas have few foster homes available for children removed in their counties and active recruitment is essential. In Area 3 inquiry meeting are held throughout the area based on the numbers of inquiries received in counties. For these meetings both the resource and adoption workers jointly participate to answer questions. These meetings are held monthly to every other month in some more rural areas. All individuals who have inquired are invited to the meetings. Staff are looking to have more quality homes and not just quantity of homes to open. Several of the resource staff are having current open homes attend these meetings as well to share stories to assist in recruiting new homes. The resource/adoption staff speak to specific needs of children and what types of children we are actively pursuing home for such as newborns/infants that cannot go to daycare for a time due to illness; families who are willing to accept infants/toddler with feeding problems, feeding tubes, breathing machines or drug affected babies as that tends to be a recurring issues; large sibling groups, drug affected babies and teenagers. Staff spend time during the info meetings talking about older children, emergency shelters and group homes and why that is not the optimal living situation for children; we discuss IL services and why it is so important for an older child in foster care to be attached to a foster family (learn living skills they don't get in a facility, such as changing a tire; opening a checking account; doing laundry; shopping on a budget, etc.) and that those skills are best taught by a family.

  The CALL has been actively running to recruit and train new homes in Saline county. The CALL is getting started in Garland and there has been one Information meeting so far with the CALL. The local CALL is running into staffing issues on their own

committee, so while they are still plugging along, they've hit some barriers, mostly around lack of volunteers available.

- *Retention*- In the area as a whole, the existing foster parents continue to be the best recruitment for new homes which is why it continues to be imperative that existing foster parents have good things to say about the process, DCFS and the experience as a whole. So not only recruitment but retention of homes is important to maintaining specialized home for children with individualized needs. In order to retain foster parents, several counties have foster parent support groups which provides peer support and ongoing training to foster parents.

Available Adoptive Homes to match all needs of children waiting adoptive placement and decrease in disruption of adoptions:

- In order to reduce disruptions, adoption staff in Area 3 look for services that they believe will benefit the child and the family in adoptive placements to provide support. Sometimes a child has to be re-evaluated through counseling in order to receive the correct services in order to help the family. Adoption staff also advise adoptive parents to take class(s) or read books in the area of ADHD, Adjustment disorder, RAD and other behavior disorders.
- As far as recruitment of homes, In Garland County, staff hold inquiry meetings every other month. In an effort to recruit African American homes, one adoption worker is planning to send letters to all the African American churches in the area to ask about speaking to their congregation briefly about adoption/foster care. During this recruitment activity the worker will leave pamphlets with contact information for both the adoptive and the resource worker as well as times for inquiry upcoming inquiry meetings.

Assess data reports and feedback on accuracy and develop strategies to improve practice with families:

- Area 3 sends out weekly CHRIS net reports to supervisors as monitoring tools for corrective actions to staff. Reports that are utilized the most with staff to ensure offering services are the reports that indicate home visits to families, whether or not there are current case plans. AD provides a copy of each month's COR reports during monthly supervisors meetings to discuss areas of improvement needed and to discuss any possible barriers. AD has also use the QSPR reviews to determine areas of improvement needed in the Area. Greg Moore, the Quality Assurance Manager came to comes speak to supervisors during a monthly meeting about strengths in the casework practice and areas of improvement needed in the area. Greg Moore is scheduled to meet with all area staff at the next Quarterly Training to discuss recent QSPR reviews and practice needs for the Area to work towards during this next review cycle.

AREA 4 AREA DIRECTOR-CHARLOTTE JEWEL

Assess status of each County practice model:

- The area continues to apply practice model in providing most appropriate services to families involved with the Agency through allegations of maltreatment. It is the desire of each staff person from supervisor to program assistants for our families to be treated in the most respectful manner and services to assist each family member in moving towards improvements and not hindrances is our goal. The Supervisors and staff are encouraged to improve their casework practices as recommended in the QSPR findings which include engaging families and making better assessments of families. Supervisors assign cases

after assessing the worker's strengths and abilities. The counties will implement formal supervision held monthly to evaluate the worker's casework practice. The minimal acceptable standard is no less than twice a month on a consistent basis. New workers will receive more formalized training weekly. The area continues to work as a family unit providing support to other counties and assisting with foster home placement which enables children to remain in close proximity to family and schools.

- The previous Area Director required that each Supervisor have at least monthly case consultations with their staff regarding their cases on their caseloads and when more formalized meetings are required make arrangements to complete as necessary and required by policy. The family input and participation is key in working toward resolutions of problems and issues that caused Agency involvement. The Quarterly case reviews are a positive impact on written documentation for the workers when handling their assigned families. Supervisors are expected to review policy during their weekly or biweekly staff meetings and to assure that all new policy is reviewed and certified by the employee.
- Interdivisional staffing, SOC meetings, IFS and our contracts with Lewis Campbell for psychological and counseling contract with Al Dodds has assisted with development and accessing appropriate services for the family. Family centered meetings with the family include providers and CASA who assist with brainstorming to determine services that are needed for the family. The close working relationship that we have with our local mental health centers enable us to access services for families also. We contact them on a weekly basis to assist us with families, foster parents and foster children. Service gaps are drug prevention and drug treatment in local areas. Outpatient services are not available to families in their own community so many travel long distances after hours with the assistance of DCFS for outpatient treatment.

Continuing shift in the number of children entering foster care and increase in the number of children being supported in their own homes:

- Each county puts forth every effort to assess and contact relatives or family members that have an active role in the life of the child. The Resource unit is on call 24 hours a day, seven days a week to assist with in home consultations and assessments for provisional homes to facilitate relative placement for children.
- The counties continue to maintain working relationship with community stakeholders and other connections to provide services prior to looking at any removal of a child. The Supervisors continue to serve on the CASSP, SOC, MDT, and local community councils. The supervisors and the community organizations and interagency divisions work together to provide services to the family and prevent foster care. The SOC and wrap plans have enabled DCFS to assist families with hard services through their funding program. IFS and in home service contractors have also assisted in prevention of foster care.

Continue analysis of policy:

- Policy updates are received just about daily via email with website information given to refresh and review. The complete DCFS policy is available on CHRIS.net and easily accessible. Supervisor often refers DCFS staff to Policy for a better understanding of issues faced on a daily basis.

Continue strengthening CACD/DCFS/LLE relationships:

- There is an open line of communication maintained in each County by attendance at MDT meeting held on a bi-weekly basis and CACD is always at the meetings and LLE attends. This has created an open communication between the different service providers and problems are resolved more timely and consistently. CACD if housed in several of the county offices in Area IV. There is an ongoing dialogue with them and our investigative unit completes health and safety assessments on a daily basis with CACD.

Improved assessment of families needs and access to services to safely maintain children in their own home:

- The FSNRA is used by our families to provide key information on history and most important strengths the agency can build on within the family structure. The assigned workers assist the families when necessary in order for the questions to be answered in detail. This assessment along with the maltreatment investigation is used to work with families to create the most appropriate case plan and services. Area Director reviews the COR monthly to assure that the FSNRA is completed timely. The county supervisor is included in the staffing to assure that all services such as IFS, counseling, wrap around services, homemaker services, and parenting are provided to the family. Supervisors are reviewing the FSNRAs and participating in staffing to assure that all family members are included in case planning as recommended by the QSPR findings.
- Every effort is being made to provide services in order for some of the most recent removals to be returned home or to relatives. The investigative team works diligently to work with the family to put in place a protection plan if the family has the ability to work to keep the child in the home safely. The case is opened immediately and services are provided to the family by the county. IFS is available and begin immediately if necessary. SOC funds and wraparound services are accessed to assist the family to maintain the child in the home. Interdivisional staffings are held to access services to prevent foster care. The points on the Health and Safety Checklist were covered in detail in Structured Decision Making Training and these are the factors stressed for FSW's to assess when they go on investigations. All investigators and supervisors have attended Structured Decision Making training.

Continue casework process for youth in foster care and ways of measuring success when transition to adulthood:

- The County Supervisor reviews all reports that reflect services to the teenagers in foster care. The ILP worker has ongoing contact with teens in the area to assure that they receive appropriate training. Training is provided at least twice monthly to the area for the teenagers in foster care.
- The foster care cases are staffed every three months and the ILP worker is invited to the staffing. The staffings are a method to measure success of the case plan and Youth Transition Plan. QSPR reviews also review some foster care with youth in foster care. Some cases continue to be reviewed in court and followed by the AALs to assure that services are delivered.
- Our ILP worker provides monthly reports to the Area Director and central office about work and successes with youth in foster care. Area Director is requiring the ILP worker to meet with staff quarterly to review changes in the ILP assessment and provide direction in ILP service delivery.

Continue to evaluate case progress and make improvements through the development of quality improvement strategies:

- Cases are reviewed quarterly and sometimes daily depending on circumstances in each County. The areas of weakness are discussed with the FSWs and through the goals listed on PIP the staff is constantly reminded of the importance to have both of these areas always in compliance. There has been marked improvement in visitation and the workers are bringing all of the case plans into compliance. Area IV has continued to improve their percentages in most COR elements and had the highest percentage of foster and protective service visits, the area continues to increase their percentages in foster care and family visits. The 120 reporting provides them with the method to monitor and assure that all visits are completed.
- Supervisors are reviewing narrative to assure that visits address case planning, health and safety, and permanency. Supervisors are providing protected time for staff to assure that documentation is current. Area Director has encouraged management of cases to assure that all caseloads are equal and providing of assistance from other counties to assure that all visits are made and staff feels supported when there are vacancies.

Improved collaboration between courts and DCFS for improved outcomes for children and families:

- Each county is encouraged to participate and plan quarterly meetings with their judges. These meetings have been held in most judicial districts. The open line of communication has provided very positive interaction between the staff and judicial system. The area continues to work well with CASA and AALs who have a great influence on our relationship with the court system. Also, Area IV has a great partnership with other community providers to ensure that children and families have access to formal and informal services to best meet their individualized needs.

Varied strategies on statewide level for recognition and recruitment of staff-decreased turnover:

- The current staff range in length of employment from 1 year to 18 years. There has been very little turnover in most of the counties in Area IV in the past 5 years. The previous Area Director continued to recognize the counties in Area Meeting for their support to each other and to other Areas. Each year we hold a foster parent conference and there is a FSW, PA, County Supervisor, Foster Parent, and Story Award that is recognized for their work. These awards are nominated by all staff and voted on by the Area Director and IV-E staff. The IV-E partners are also providing quarterly meetings for the PAs, Workers and Supervisors where they provide training which may include safety practices and stress management training.

Continue to implement and assess and evaluate effectiveness of retention strategies and change as needed:

- The program assistants participate in annual trainings provided by the Agency to address any needs in the area of parenting sessions dealing with our parents as well as foster parents are provided updated trainings on a quarterly basis through Resource Worker.
- Area IV continues to maintain county staff on an extremely high level with very little turnover. Retention has not been an issue in the area. Area IV County Supervisors have supervisors that have been with DCFS 10-30 plus years. Our IV-E providers continue to provide quarterly training for the County Supervisors, FSWs and PAs for training and support. The area also provides support to each other to assist when a county has an issue

with staff out on FML or other crisis. The Area has also provided support to other Areas who are experiencing staffing difficulties while completing their own casework supervision or management.

Specialized foster families with experience to meet the individualized needs of children entering foster care:

- The State has contracted with Community Mental Health Centers to provide training to DCFS foster parents to enhance parenting skills for children diagnosed with ADHD, Dealing with the Defiant Child, and Love and Logic training. The mental health centers are also providing needed training for foster parents dealing with specific issues dealing with corrective action requirements. Training has been provided for foster parents at the yearly Foster Parent conference regarding issues of Autism. Trauma Focused Behavior Treatment continues to be offered for the children/foster parents and child.

Continue to assess and make needed changes to ensure the QSPR process remains aligned with the practice model:

- The QSPR reviews are taken seriously by the staff in all counties and the Area Director. Once the reviews are completed and the conferences held with the workers, the supervisor focuses on any necessary corrective action. The County Supervisors review previous deficiencies to assure that they are corrected. Supervisors monitor the worker's improvement by reviewing of cases, COR and approval of narrative. Court cases are reviewed three to six months and compliance with court orders is monitored by the court and by the supervisor. Investigative supervisors are shadowing their staff and providing that one on one casework supervision.

Assess data reports and feedback on accuracy and develop strategies to improve practice with families:

- The various tools that are provided for monitoring purposes easily identify those areas that need improvement. The workers are reminded on a consistent basis of what needs to be improved upon. The current Area Director is meeting with the county supervisors on a monthly basis to assess how they monitor services to families. The COR is reviewed with the county supervisors to assure that services are timely to families. Percentages are reviewed with the County Supervisors and plans to improve are implemented at each monthly meeting.
- The QSPR reviews are completed and proper notification is always given with no apparent problems with this area of implementation. Area IV met with the DCFS Director in 2012 and accepted recommendations that would improve quality service to our families. The counties have used these suggestions to make their services more family centered. The QSPR synopsis recommended that we needed to work to address the inconsistencies in casework between in home and foster care cases. More attention should be made to the protective services cases which are occurring due to the 120 day reports for Protective Services is available for review just as foster care reports. Supervisors are expected to assure that these visits are made. The Area was recommended to do a better job in engaging families, especially fathers. The area is including all families' members in case planning and more DNA tests are ordered and paid for by the agency on a regular basis.
- Reports are already provided and implemented to address the improvement of practice model. Such reports as 120 day; COR; case plan; Supervisor Box within CHRIS system to allow review of narratives being written. The Area Director and all supervisors review

numerous daily through CHRIS Net Reports that assist them with case management. Reports indicate how long a child has been in care, frequency of visits, if there is a current case plan in effect, permanency planning goal, and number of children with TPR and ready to adopt. These reports are all beneficial in managing the counties and area.

Accurate data management reports for managers and supervisors to focus on items and practices to improve:

- There are several reports are already available in the CHRIS.net for review and use by supervisors and workers. The 120 day protective and foster care visit reports have improved our ability to monitor the home visits by the staff. This has improved our ability to acquire the information needed to determine the strengths and weaknesses of each county. The Area Director has the ability to view caseload size through CHRIS and through monthly reports. COR reports also reflect accurate data that assist the Area Director in assessing needs of the county.

Survey results are utilized to make changes in practices and integrates within the QSPR process for continuous quality improvement and customer satisfaction:

- The counties continue to complete their quarterly case reviews and monitor monthly COR reports. The QSPR reviews provide hands on approach and inform the staff of quality services or lack of by an objective third party.

AREA 5 AREA DIRECTOR-JANIS MATLOCK

Assess status of each County practice model:

- Area V strives to maintain children in their own home by assessing the safety of the children and working with the family to offer services during the investigation. Staff uses their community providers, WRAP, IFS services, etc. at the front end. Staff have worked hard to be family focused, ensuring the safety of children, and working to maintain children with parents and if that is not possible, to locate appropriate family members. We have placed a large number of children with relatives shortly after the child being placed in foster care. We have also located fathers more frequently and had them involved in both foster care and protective services cases.
- Area V goals are to see every child, every family member, at least once per month and that each home visit be meaningful, as in addressing the case plan goals and in assessment of any new needs or concerns; staff will take the time to truly assess the situation from all levels in order to help the family find a way to get beyond the emergency issues and to the point of being able to address the root of the problems with workable solutions; better care for our foster children, as in seeing each one monthly and maintaining weekly phone contact with those placed outside of the county; ensuring (services) counseling is in place, dental and physical wellbeing is addressed and that all possible needs have been given to address educational needs.
- Staff is improving documenting in CHRIS in a timely manner so that it will accurately reflect the facts of the case and hard work of staff.

Continuing shift in the number of children entering foster care and increase in the number of children being supported in their own homes:

- Through SDM training and the risk assessment, our area staff is putting protection plans in place to maintain the children in their home and also by opening supportive services during the investigation.

- The implementation of IFS services and WRAP services has aided the ability to leave children in the home and to return them quicker. Also, the ability to pay for services, i.e. utilities, rent, heaters has been somewhat streamlined- created a quicker delivery of help so that children can remain in the home. Ensuring the safety of the child by working more closely with the families, referring families for available contract services, and providing in home services such as housekeeping and parenting classes.
- Meetings with CACD, MDT'S, local police departments, Drug Task force, and probation services within the last year to discuss each other's roles & policies and how each department can assist one another in achieving the goals of child safety & family preservation. It has helped that each agencies duties are outlined very clearly.
- Also through learning circles meetings and implementing the DEC model with law enforcement.

Improved assessment of families needs and access to services to safely maintain children in their own home:

- By using the 14 point risk assessment/safety factors on each visit either in investigations or PS cases to ensure the children's safety.
- Completing the Initial Risk Assessment and attending SDM training.
- Staff meets directly with family members to use the FSNRA tool in order to assess the needs of the family.

Timely and appropriate match for children in adoptive families:

- Putting adoption workers back under the Area Directors in order to have all staff working as team players to get adoption packets updated, adoption applicants processed more timely, and in the system so that the matching system can actually be completed so families can be identified.
- Staff obtains history on children to provide a complete disclosure packet to adoption specialist at time that child goal changes to adoption.
- Training staff on policy as to what the FSW should be doing to get all documents to adoptions early in the process, thus allowing adoptions to move as quickly as possible without back tracking.

Continue casework process for youth in foster care and ways of measuring success when transition to adulthood:

- Having a great support system seems to be a key in success for our youth. Staff works hard to find a support system for our kids.
- Staff utilizes the transitional services & life plan tools in order to help youth transition as smoothly as possible to adulthood.

Continue to evaluate case progress and make improvements through the development of quality improvement strategies:

- Continuation of scrutiny of the case progress by reading narratives, discussing cases, holding staffing's.
- When new issues/concerns arise engage family and come up with solutions.
- Viewing online reports and case reviews.
- Looking at what has worked and what hasn't.
- Connecting the family with community resources.

Effective messaging for community and stakeholders understanding of DCFS role:

- Staff returning calls and taking the time to make connections with stake holders

- Development of the C.A.L.L. in some counties has helped involve more people and give more positive attitude toward the agency has been developed.
- Staff attend meetings with local organizations & other service providers to educate about DCFS

Improved collaboration between courts and DCFS for improved outcomes for children and families:

- This continues to be improving due to changes in policy and in law.
- Most judges have quarterly meetings where any issues are discussed and new policies are given, in regard to drug screens, case plans, etc.
- Judge also hosted meeting between DCFS and juvenile probation.

Integrate strategies that support and will sustain the DCFS transformation process:

- Continued trainings are guiding the change of the mindset to reflect the process.

Varied strategies on statewide level for recognition and recruitment of staff-decreased turnover:

- Treat staff with respect, and assist when they are overwhelmed, Staff is complimented for achievements regularly to include being recognized in a group.

Continue to implement and assess and evaluate effectiveness of retention strategies and change as needed:

- Continue to treat staff with respect, and assist when they are overwhelmed, Staff is complimented for achievements regularly to include being recognized in a group.

Data reports available to accurately identify resources in local communities:

- Team up with DCO for new resources and resource directory,
- E-Sources
- Internet

Improved stability of placement and decrease in sibling separation and decrease in the utilization of group home living for older youth:

- Staff's first choice is always to place siblings together. High priority to get current separated children back together.
- Working to get The C.A.L.L. in every county.

Specialized foster families with experience to meet the individualized needs of children entering foster care:

- Working to recruit and maintain

Available Adoptive Homes to match all needs of children waiting adoptive placement and decrease in disruption of adoptions:

- Working to recruit and maintain

Assess data reports and feedback on accuracy and develop strategies to improve practice with families:

- CHRIS online reports, they save time and allow the supervisor to monitor the cases effectively and in the same way.

Accurate data management reports for managers and supervisors to focus on items and practices to improve:

- CHRIS online reports, they save time and allow the supervisor to monitor the cases effectively and in the same way

AREA 6 AREA DIRECTOR-MILTON GRAHAM

Assess status of each County practice model:

- Transfer and re-assign County Supervisor Staff to ensure that each county office is operating using the same strategies and blue print stated in the overall state Practice Model as well as provide equal and adequate direct supervision for all frontline workers.
- Area Director Meetings with County Supervisors and Unit Supervisor staff to receive feedback and provide oversight and direction.
- Area Director makes at least monthly site visits to each county office and attends county office staff meetings at least once monthly in each county office.
- Continue weekly Friday supervisors meeting to conduct case reviews for quality, best case practice, appropriate service referral i.e. IFS, WRAP or MAP. Monthly County Supervisors Meetings and Resource Worker Meetings.
- Quarterly Judicial Leadership Team Meetings with 10th division.
- Transfer direct supervision of Resource Unit from Area Director to Program Manager who supervises Health Services Unit.
- Move Adoption Supervisor under Pulaski-South County Supervisor.

Continuing shift in the number of children entering foster care and increase in the number of children being supported in their own homes:

- Emphasize and highlight state wide and area statics in during weekly Friday Supervisors meeting while reviewing and monitoring all open cases and monthly county supervisor meeting, the significant drop in children being place in foster care.
- Communicate effectively with staff during through quarterly trainings and training team meetings the need for more detailed documentation regarding weekly home visits in cases where children are still in their family home.
- Conduct review of each open protective services case which resulted in children being removed to determine if appropriate and reasonable services were provided to prevent removal.

Training partnership is repositioned and providing effective support to field:

- Continue to meet quarterly with the University Training Partnership for collaboration and provide feedback to ensure that the needs of the font line staff and to develop an effective working plan to identify key specific needs for training.

Continue information sessions to gather feedback of practice model implementation:

- Continue to utilize the existing established meeting times of weekly supervisors meeting, monthly supervisors meetings, county staff meetings, quarterly training team meetings

Continue analysis of policy:

- Review updated policy during each established meeting times of weekly supervisors meeting, monthly supervisors meetings, county staff meetings, quarterly area training meetings.

Continue strengthening CACD/DCFS/LLE relationships:

- Continue to have open dialogue through utilizing open telephone and e-mail communication regarding open investigations and schedule face to face staffing of investigations as needed.

Continue to convene PIP Practice Model Workgroup (Advisory Board):

- Utilize already established meeting times of weekly supervisors meeting
- Monthly supervisors meetings

- County staff meetings to review and emphasize area and state PIP Practice Model

Improved assessment of families needs and access to services to safely maintain children in their own home:

- During weekly Supervisor Meetings continue to review each open case and request update of identified immediate needs and services of each to assess and determine and ensure that children are able to be maintained safely in their own home.
- Conduct review of each open protective services case which resulted in children being removed to determine if appropriate and reasonable services were provided to prevent removal.

Timely and appropriate match for children in adoptive families:

- Require Adoption Unit Supervisor to evaluate and keep all open and approved adoptive placements eligible and enter each in the adoption data matching system.

Continue casework process for youth in foster care and ways of measuring success when transition to adulthood:

- Require County and Unit Supervisors to ensure that each foster youth 14 years of age and above has an updated appropriate and approved Transitional Living Plan.
- Ensure that the plan is monitored and updated as needed and that the foster youth is involved in the development and update of that plan.

Continue to evaluate case progress and make improvements through the development of quality improvement strategies:

- Require each County Supervisor to submit Case Reviews in their monthly reviews complete with identified deficiencies and recommendations and plans for case progress to achieve safety wellbeing and permanency for each open case.

Quality Assurance strategies are aligned with state and federal regulations and Arkansas Practice Model:

- Area Director and County Supervisors monitor QPR and QSPR monthly
- Area Director review QPR and develop a plan for improvement in any areas and elements of the QPR not meeting the required standards prescribed for that particular QPR area.
- Area Director review reports provided by the Quality Assurance Unit.

Dashboard accessible for data management:

- Review online CHRISnet reports weekly and monthly and review for compliance weekly, monthly and quarterly.

Improved QSPR process with involved stakeholders and inter reliability for consistent reviews:

- Provide names and contacts of all known and involved stakeholders to the Quality Assurance Unit at least a week in advance of them conducting the QSPR process in our area.

Effective messaging for community and stakeholders understanding of DCFS role:

- Seek out and participate in, In-service training for community stakeholders such as school districts, juvenile court system utilize those opportunities to provide and message overall state PIP Practice Model and how services and strategies being implemented in our area county mirror and support that Practice Model and how it will ensure better services delivery.

Improved collaboration between courts and DCFS for improved outcomes for children and families:

- Continue already established mandatory monthly area participation in 10th Division Judicial Leadership meetings, seek to establish and schedule similar if not the same style meeting with the other two court divisions and judges

Integrate strategies that support and will sustain the DCFS transformation process:

- Area Director will continue to promote, encourage and ensure that each county office is participating in AR Learning Circles and to ensure that each DCFS employee from clerical, P.A.'s, HSW's, FSW's and Supervisors are speaking the same language and understand our agencies transformative process.

Varied strategies on statewide level for recognition and recruitment of staff-decreased turnover:

- Area Director will continue to lead by example and model recognition of DCFS employees who are deserving of being recognized and rewarded for their efforts to meet the desired outcomes for service delivery to our children and families we serve.

Continue to implement and assess and evaluate effectiveness of retention strategies and change as needed:

- Area Director will visit each county office at least bi-monthly and ensure that all county supervisors have a strategy in place to assess and evaluate.

Data reports available to accurately identify resources in local communities:

- Review provided reports on CHRISnet and DHS Share

Continue to implement strategies and assess effectiveness of changes made to improve contracts and purchased services for children and families to achieve better outcomes:

- Area Director will review information provided on a monthly basis provided by county supervisors in their monthly reports and provide feedback to central office executive staff and support staff regarding the effectiveness of contract providers and services purchased for children and families.

Services developed to meet the individualized based on accurate data reports for families within the local community:

- Review any provided online reports or community provided reports thorough CCC and other community stakeholders and analyze the data provided to research and recruit potential community providers.

Improved stability of placement and decrease in sibling separation and decrease in the utilization of group home living for older youth:

- Promote and encourage quality home visits by FSW's and to collaborate with foster home providers to become proactive in addressing potential placement disruption issues.
- Monitor sibling reports monthly to ensure that all efforts are being made to place siblings together. Communicate with C.A.L.L. partnership and effectively communicate the need for more foster home providers that are suited and willing to provide safe stable foster home placements for sibling groups.
- Continue to work with the are foster parent association by ensuring that the area supervisors and resource unit attend and participate by providing updates on trainings, policy during monthly association meetings.

Specialized foster families with experience to meet the individualized needs of children entering foster care:

- Seek avenues to increase recruiting efforts in schools, hospitals, through utilization of free media advertisement, C.A.L.L. resource and other DCFS staff strategically placing pamphlets and posters and timely follow up of all inquiries and applicants.

Available Adoptive Homes to match all needs of children waiting adoptive placement and decrease in disruption of adoptions:

- Ensure that all approved adoptive homes are kept eligible and entered into the data matching system; improve post adoption services by utilizing timely follow up of all phone calls, inquiries and being proactive in providing referrals for services.

Continue to assess and make needed changes to ensure the QSPR process remains aligned with the practice model:

- Area Director and County Supervisors monitor QSPR monthly
- Area Director review QSPR results with the Quality Assurance Manager and develop a plan for improvement in any areas and elements of the QSPR not meeting the required standards prescribed for that particular QSPR area.
- Area Director review reports provided by the Quality Assurance Unit

Assess data reports and feedback on accuracy and develop strategies to improve practice with families:

- Area Director and Program Administrator will follow up to ensure that County Supervisors are reviewing online CHRISnet Reports weekly and developing ongoing strategies to improve practice with families and ensuring that frontline workers and supervisors are implementing those strategies.

Accurate data management reports for managers and supervisors to focus on items and practices to improve:

- Area Director and Program Administrator will follow up to ensure that County Supervisors are reviewing online CHRISnet Reports weekly and developing ongoing strategies to improve practice with families and ensuring that frontline workers and supervisors are implementing those strategies. Any data that appears incongruent or questionable will be forwarded back to the Area Director and/or Program Administrator to be brought to the attention of our assistant director of DCFS for evaluation and/or corrections or explanation.

Prioritize and complete when possible due to fiscal capacity CHRIS enhancements necessary for practice model alignment:

- Provide appropriate and detailed explanation of CHRIS issues that are incongruent to and hinder or make it difficult to comply or capture necessary reporting data to document Practice Model compliance

Align process of training on how to access reports and understand the data including the analysis of data with the training system:

- Area Director will communicate with central office staff development team and MidSouth CHRIS training staff to request any training needs necessary for staff and supervisors on how to access online reports and how to analyze data for usage on a day to day basis.

Survey results are utilized to make changes in practices and integrates within the QSPR process for continuous quality improvement and customer satisfaction:

- Area Director and County Supervisors monitor QSPR monthly, Area Director review QSPR results with the Quality Assurance Manager and develop a plan for improvement in any areas and elements of the QSPR not meeting the required standards prescribed for that particular QSPR area. Area Director review reports provided by the Quality Assurance Unit.

AREA 7 AREA DIRECTOR-ANGELA NEWCOMB

Assess status of each County practice model:

- Ongoing monthly supervisor meetings in which we discuss if best case practice is being followed in the area and how CHRIS net reports are being utilized in each county, There are quarterly judge's meetings and monthly System of Care meetings taking place. Quarterly Area VII staff trainings to ensure that appropriate information and trainings are being given to field staff.
- Learning Circles have also begun in Area VII that helps in strengthening the practice model goals that we follow.

Continuing shift in the number of children entering foster care and increase in the number of children being supported in their own homes:

- There has been a Structured Decision Making Training that our investigation staff has attended. Staff are doing more thorough assessments of safety and trying to find support for the family immediately so that there are no safety concerns for the children to remain in the homes.
- Provisional Homes are growing in number in Area VII to help children remain with family.

Training partnership is repositioned and providing effective support to field:

- Our UAPB partnership provides support to our field staff by mentoring and also training activities. They also complete advanced practice with new supervisors or other employees needing guidance in mentoring.

Continue information sessions to gather feedback of practice model implementation:

- This is done on a monthly basis with supervisors and quarterly basis with workers

Continue analysis of policy:

- This is done on a monthly basis with supervisors and staff

Continue strengthening CACD/DCFS/LLE relationships:

- Use of MDT meetings and having constant contact with supervisors and staff of those agency's

Improved assessment of families needs and access to services to safely maintain children in their own home:

- Supervisory case reviews, weekly case consultations with workers on each case.
- Use of reports in CHRIS to assist supervisors monitor compliance that home visits are being completed in protective service cases

Timely and appropriate match for children in adoptive families:

- Ensure that appropriate characteristics are entered into the data matching system. Supervisor monitors these matches

Continue casework process for youth in foster care and ways of measuring success when transition to adulthood:

- Ensuring that youth in foster care have an appropriate transitional living plan developed along with agreement of what they need to be doing.
- Locating more appropriate ILP sponsors for youth that can also help with mentoring the youth.

Continue to evaluate case progress and make improvements through the development of quality improvement strategies:

- Weekly case review with case worker.
- Getting weekly updates on IFS services and parenting classes or other services that have been put into place with the family while ensuring stability, wellness and support.

Quality Assurance strategies are aligned with state and federal regulations and Arkansas Practice Model:

- QSPR process was utilized in Area VII in March of 2013

Dashboard accessible for data management:

- DHS Share and CHRIS net is used on a daily basis

Improved QSPR process with involved stakeholders and inter reliability for consistent reviews:

- QSPR is used at least twice a year

Effective messaging for community and stakeholders understanding of DCFS role:

- Informational meetings have been held with community and stakeholders to educate them on the rolls of DCFS

Improved collaboration between courts and DCFS for improved outcomes for children and families:

- Quarterly Judge's Meetings are held

Integrate strategies that support and will sustain the DCFS transformation process:

- Learning Circles are being used in Area VII to assist with the changes being made and helping staff to learn to look outside the box

Varied strategies on statewide level for recognition and recruitment of staff-decreased turnover:

- Learning Circles Workgroup in Area VII along with a statewide group that is looking at bettering recognition of employees and recruitment of staff.

Data reports available to accurately identify resources in local communities:

- There is some information in CHRIS, United Way website and there is also a Learning Circles Group looking at a new program to use to enter resources into for staff to utilize

Continue to implement strategies and assess effectiveness of changes made to improve contracts and purchased services for children and families to achieve better outcomes:

- Work with financial coordinator; send up suggestions from field staff on what is really needed to achieve better outcomes.

Improved stability of placement and decrease in sibling separation and decrease in the utilization of group home living for older youth:

- A monthly report is completed on siblings who are separated. These are monitored monthly by supervisors and by area director to see if siblings groups who are split up are being staffed to see if placements can be made together

Specialized foster families with experience to meet the individualized needs of children entering foster care:

- CALL program trying to be more proactive in this process

Available Adoptive Homes to match all needs of children waiting adoptive placement and decrease in disruption of adoptions:

- Area VII is in the process of cleaning up inquiries of adoptive home.

Continue to assess and make needed changes to ensure the QSPR process remains aligned with the practice model:

- Ongoing for Area VII by monitoring reports by supervisors and area director

Assess data reports and feedback on accuracy and develop strategies to improve practice with families:

- These reports are pulled from CHRIS net.

Align process of training on how to access reports and understand the data including the analysis of data with the training system:

- Area Director assists supervisors in knowing which are the main reports to be monitored

AREA 8 AREA DIRECTOR-SUZANN HENRY

Improved assessment of families needs and access to services to safely maintain children in their own home:

- All staff in Area 8 attended Structured Decision Making Training. This was excellent training that provided staff with the knowledge and tools to do a better job of assessing safety as well as determining whether children can safely remain in their own homes.
- Clay, Greene, Craighead, Mississippi, Lawrence and Randolph Counties participate in Care Review Teams through the Child and Youth Care Coordination Council and Wraparound with Mid-South Health Systems. The youth/family, natural supports, and service professionals partner to develop and implement a strength-based, culturally competent and highly individualized wraparound plan. These plans are geared towards maintaining children in their own homes if at all possible.
- New Workers received training on "Family Engagement and Interviewing Skills"

Continue casework process for youth in foster care and ways of measuring success when transition to adulthood:

- Supervisor provided packets to all the supervisors with policy, document and practice guides to Transitional Youth Services. Supervisor presented examples of Transitional Youth Plans.

Continue to evaluate case progress and make improvements through the development of quality improvement strategies:

- Supervisors have improved the quality of their case review with staff through the use of unit and individualized case consultation.
- New Workers received training on "FSNRA Skill Building".

Improved collaboration between courts and DCFS for improved outcomes for children and families:

- Supervisors in the 2nd Judicial District met with two Judges in our area to discuss what is going well and areas that need improvement. Judges clarified procedures to be followed as well as time frames, completion of court reports, as well as their expectations of staff regarding casework and testimony in court.

- One Judge had a Team Meeting Luncheon with all the staff in Greene County as well as OCC to maintain communication in order to continue to improve outcomes for children and families.
- Area Director, Supervisors in Izard and Fulton Counties and OCC met with another Judge to discuss his expectations and ways to improve outcomes for children and families.

Varied strategies on statewide level for recognition and recruitment of staff-decreased turnover:

- Staff Education Day held in October for all the Staff in Area 8. DCFS Director Cecile Blucker spoke to the staff about the importance of their daily work with families and the connection to the overall practice model and Mission of DCFS.
- Employee was recognized for her selection as Employee of the Year for DCFS. Area 8 also recognized Transitional Youth Coordinator Sherri Burris for her excellence in providing services to our teens in foster care.
- Supervisor and a FSW were selected to attend the National Child Abuse and Neglect Conference based on their exemplary work. Upon their return they presented training to county and area staff on what they had learned at the conference.
- Three FSW's in the area were sent to the Arkansas Child Abuse and Neglect Conference. They were selected due to their dedication to providing Best Practice to the families on their caseload.

Continue to implement and assess and evaluate effectiveness of retention strategies and change as needed:

- All staff in Area 8 received Trauma Focused Training presented by the ASU IV-E Academic Partnership which helped us to understand the trauma that foster children go through and to better understand their needs.
- Supervisors in Area 8 received training on the "Effects of Secondary Trauma on Families, Themselves, their Staff and Other Stakeholders" presented by the ASU IV-E Academic Partnership.
- Training was provided for new workers on "Coaching for Effective Visitation among Birth Families, Foster Families, DCFS Staff and Children".
- Area 8 Supervisors have taken a close look at each of their staff and evaluated their strengths and weaknesses. Staff has been moved to the job duties that best suit their strengths whenever possible. For example, some staff does better than others when it comes to testifying in court so these workers are assigned to foster care and FINS cases. Some workers do a better job of assessing safety and these workers are assigned as investigators. Other workers are excellent case managers and they are assigned to foster care and protective services cases. Supervisors have also looked at other duties that Program Assistants can do such as adoption packets and Medicaid Waiver Packets to assist the workers and to utilize their skills in the best way possible.

Data reports available to accurately identify resources in local communities:

- Clay, Greene, Craighead, Mississippi, Lawrence and Randolph Counties participate in Care Review Teams through the Child and Youth Care Coordination Council and Wraparound with Mid-South Health Systems. The youth/family, natural supports, and service professionals partner to develop and implement a strength-based, culturally competent and highly individualized wraparound plan. These plans are geared towards maintaining children in their own homes if at all possible.

- Collaborated with a Judge and Dr. Sneed with the Children's Clinic and held a community conference to educate on the Legal and Medical Needs of Foster Children.

Specialized foster families with experience to meet the individualized needs of children entering foster care:

- Trauma Focused Training was presented by the ASU Interdisciplinary Team. Keynote Speaker was Joy Osofsky, who is an authority on child drama. DCFS Staff, foster parents, field students and community partners were in attendance.

Continue to assess and make needed changes to ensure the QSPR process remains aligned with the practice model:

- Greg Moore presented to Area 8 staff in February 2012 on "Improving Practice Based on the Practice Model and in Review of QSPR".

Assess data reports and feedback on accuracy and develop strategies to improve practice with families:

- Area Director and Supervisors have been closely monitoring the 120 Day Visit Report for Protective Services and Foster Care. Protective Services cases that had not been visited in over 60 days were assessed to determine current safety and need for continued services. The Foster Care 120 Day report is reviewed to make sure that foster children are being visited monthly. Supervisors are to monitor this report to ensure that foster children placed out of the area are visited monthly. If not, they are to send emails to the supervisors in the secondary counties to remind them to visit our foster children.
- The Sibling Report is updated each month to monitor our progress in placing siblings in foster care together. By completing this report it has helped the supervisors become more focused on the siblings that are not together and assess at least once a month what can be done to get them together or at least ensure that they are visiting.

Accurate data management reports for managers and supervisors to focus on items and practices to improve:

- Area Director and Supervisors have been closely monitoring the 120 Day Visit Report for Protective Services and Foster Care. Protective Services cases that had not been visited in over 60 days were assessed to determine current safety and need for continued services. The Foster Care 120 Day report is reviewed to make sure that foster children are being visited monthly. Supervisors are to monitor this report to ensure that foster children placed out of the area are visited monthly. If not, they are to send emails to the supervisors in the secondary counties to remind them to visit our foster children.
- The Sibling Report is updated each month to monitor our progress in placing siblings in foster care together. By completing this report it has helped the supervisors become more focused on the siblings that are not together and assess at least once a month what can be done to get them together or at least ensure that they are visiting.

AREA 9 AREA DIRECTOR-CYNDI ROWLETT

Assess status of each County practice model:

- Meeting with Greg Moore-to discuss Area 9 QSPR and strategy for practice model change
- We will continue to include field staff on committees to incorporate field practice for input in developing practice models and policies. (Care, Commit, Connect) (LAP)(IV-E review team)

- Several area supervisors are on Care, Commit, Connect committees and break out work groups.

Continuing shift in the number of children entering foster care and increase in the number of children being supported in their own homes:

- Consistent practice in visiting the homes of the Protective Services cases making needed referrals with follow up to ensure the services needed are in place for the families.
- Consistent monitoring of the CHRIS reports by Supervisors to ensure the families are having regular contact with the Department.
- Utilize the 120 day report for both PS and FC cases.
- Utilize services and providers that are in local communities to maintain children in their home to include Intensive Family Services, Outpatient counseling, and parenting classes.

Continue analysis of policy:

- The Area supervisors will review policy with staff during staff meetings and implement any changes in policy- area wide.

Continue strengthening CACD/DCFS/LLE relationships:

- We will continue to work with CACD following appropriate prodigals. DCFS, CACD, and LLE leaders along with committee of supervisors will meet quarterly to discuss policy and field practice to ensure consistent procedures are followed that ensure the safety of the children.
- DCFS met with CACD on new practice/standards, and new contract.

Improved assessment of families needs and access to services to safely maintain children in their own home:

- DCFS workers will be consistent in completing the FSNRA with the family face to face in the home monitoring and recording changes and provide referrals for services as needed.
- All staff attended Structured Decision Making training.
- DCFS will monitor the family and record on going changes to provide needed services utilizing the FSNRA assessment to provide consistency in the assessment process. DCFS will follow up with the service providers for reports of ongoing family services.
- Counties are being active in wrap around services and making appropriate referrals to for the CASSP system in each county. Counties are utilizing care coordination services with other county service providers.

Timely and appropriate match for children in adoptive families:

- All trained on DATA Matching

Continue casework process for youth in foster care and ways of measuring success when transition to adulthood:

- Continued monitoring with Transitional Plans and staffings that include all parties involved in the youth in foster care. Continue youth committee using surveys to assist with monitoring progress of youth.

Continue to evaluate case progress and make improvements through the development of quality improvement strategies:

- Supervisors will continue timely case reviews and work with case workers to make case improvements to ensure family services are being provided. Supervisors are meeting with their staff on case consultations to evaluate case progress and implement steps for permanency for the children and their families.

- Continue reviews of files by supervisors and the QSPR unit to ensure the Department workers are following policy and improving in deficient areas.

Improved QSPR process with involved stakeholders and inter reliability for consistent reviews:

- Local meetings are scheduled with stakeholders to continue improving services provided to families in need. Differential response meeting currently being schedule with local stakeholders in the area.
- Quarterly meeting with 2nd Judicial Judges proved very insightful and helped with improving services and court productivity.

Improved collaboration between courts and DCFS for improved outcomes for children and families:

- Ensure that the staff annually scheduled meetings with DCFS and Judges to discuss new policy and concerns.
- 2nd Judicial Judges meeting was held and attended by DCFS staff.

Varied strategies on statewide level for recognition and recruitment of staff-decreased turnover:

- We can develop a staff appreciation day.
- PIP celebration was held; Central office staff including Director Cecile Blucker attended. Focused on successes of the agency and reaching some common goals, and worker appreciation and retention.
- Area supervisors were asked to assess each employee and focus on staff's strengths and weaknesses and assign cases out based on this assessment. Staff retention has been difficult due to high case loads and short staffed.

Continue to implement and assess and evaluate effectiveness of retention strategies and change as needed:

- We need to provide appropriate training to the Program Assistants to teach parenting. In addition the Department utilizes local community resources that are willing to provide free appropriate parenting classes that are consistent with the learning materials provided to the Program Assistants.
- All staff have been trained in Trauma Informed Workplace.

Data reports available to accurately identify resources in local communities:

- Communicate with Program Coordinator services needed to ensure proper services are in place to meet the needs of the families.

Specialized foster families with experience to meet the individualized needs of children entering foster care:

- Continued training in specialized areas provided to foster parents at the state and local conferences. In addition to local associational meetings held to ensure proper care of foster children.

Assess data reports and feedback on accuracy and develop strategies to improve practice with families:

- Supervisor will continue to work with QSPR implementing strategies to ensure services are provided to the families.
- Area will look and reassess as needed and based on QPR and all other reports, ex; COR
- Monitor and utilize CHRIS NET Reports weekly with staff to provide more accurate and better services to families and improve the practice with families.

Accurate data management reports for managers and supervisors to focus on items and practices to improve:

- Supervisors will utilize CHRIS reports to correct errors on weekly basis.

AREA 10 AREA DIRECTOR-CASSANDRA SCOTT

Assess status of each County practice model:

- Ongoing monthly meeting to assess each county. Best case practice is being implemented by addressing staff strengths and weaknesses through case consultations, supervisory case reviews and now through the recent implementation of learning circles.
- Area Director has met with Greg Moore to discuss the QSPR and will invite him to attend an area meeting to share results with County supervisor which will give them an opportunity to ask more specific questions regarding desired outcomes and practices.

Continuing shift in the number of children entering foster care and increase in the number of children being supported in their own homes:

- There has not been a major decrease or increase in the number of children entering foster care. Staff has received training regarding appropriate protections plans and they utilize them to reduce the number of children entering foster care, though there has not been a significant decrease in children entering foster care the protections plans have allowed children to safely remain home who would have otherwise entered foster care.

Training partnership is repositioned and providing effective support to field:

- Monthly meeting with the partnership to address training needs of the area. Area X has also implemented a quarterly staff training day to address additional training needs.

Continue information sessions to gather feedback of practice model implementation:

- Continued monthly area meeting and monthly staff meetings in each county.

Continue analysis of policy:

- Area X supervisor staff has all been directed to provide a specific policy at each monthly staff meeting with their staff. Staff is then required to review the policy and provide feedback to their immediate supervisor regarding their understanding of the policy. The policy is then reviewed with the entire staff at the next monthly meeting to allow for questions and answers.

Continue strengthening CACD/DCFS/LLE relationships:

- Ongoing review of the contract, sharing concerns with supervisors and staff. Staff has been encouraged to respect all parties and providers and supervisors are directed to address issues and concerns quickly and thoroughly.

Improved assessment of families needs and access to services to safely maintain children in their own home:

- FSNA have improved and are conducted with the family to obtain pertinent information that will allow staff to implement needed services.

Timely and appropriate match for children in adoptive families:

- Area X does not have an issue with timely adoptions. Staff is required to assess the needs of children entering foster care thoroughly on the front end and to work closely with the adoption staff by providing all pertinent information that will allow the adoption unit to select the most appropriate family for children waiting for adoptive home.

Continue casework process for youth in foster care and ways of measuring success when transition to adulthood:

- Continued trainings with youth, seeking available county based services

- Monitoring compliance

Continue to evaluate case progress and make improvements through the development of quality improvement strategies:

- Continued staff case consultations and quality supervisory case reviews conduct with staff.

Quality Assurance strategies are aligned with state and federal regulations and Arkansas Practice Model:

- QSPR review, Copies of the practice model is posted in ALL County offices

Dashboard accessible for data management:

- SHARE and CHRISNET reports

Improved QSPR process with involved stakeholders and inter reliability for consistent reviews:

- QSPR reviewed with supervisors who then review with their staff. Meetings with stakeholders to ensure that they are aware of the process, vision, and mission.

Effective messaging for community and stakeholders understanding of DCFS role:

- Continued meetings with stakeholders and community to explain DCFS role as well as give them an opportunity to ask questions and address concerns.

Improved collaboration between courts and DCFS for improved outcomes for children and families:

- Continued quarterly meeting with the Judge and other providers.
- The Southern portion of Area X has a HUGE quarterly meeting with the Judge, community providers, juvenile probation and several agencies within the community.

Integrate strategies that support and will sustain the DCFS transformation process:

- Posted flyers of the Arkansas Practice model in each office.

Varied strategies on statewide level for recognition and recruitment of staff-decreased turnover:

- Individual praises and appreciations. Area wide staff support groups through the UAM partnership, Staff development conference.

Continue to implement and assess and evaluate effectiveness of retention strategies and change as needed:

- Ongoing meetings with supervisors and staff. Assessing current practices of each office to ensure that supervisors are providing required staff support.

Data reports available to accurately identify resources in local communities:

- Local office resource manuals, sharing new information at ongoing meetings regarding available resources.

Continue to implement strategies and assess effectiveness of changes made to improve contracts and purchased services for children and families to achieve better outcomes:

- Financial Coordinator monitors and tracks all purchases and remains in close contact with contracted providers. Detailed reports are sent to the Area Director each month include graphs and pie charts of expenditures**.**

Improved stability of placement and decrease in sibling separation and decrease in the utilization of group home living for older youth:

- Monthly separated sibling reports
- Case conferences to address sibling that are separated. Area staff utilize local foster homes whenever possible. Facility and group home placements are a last option.

Specialized foster families with experience to meet the individualized needs of children entering foster care:

- Area Adoption Conference which included recruitment efforts as well as available adoptive families and children

Assess data reports and feedback on accuracy and develop strategies to improve practice with families:

- CHRIS reports,
- COR reports,
- QSPR

Accurate data management reports for managers and supervisors to focus on items and practices to improve:

- All supervisors in Area X received additional investigation training as well as training on appropriate protection plans

Align process of training on how to access reports and understand the data including the analysis of data with the training system:

- Monthly staff meeting, reviewing reports with staff and supervisors

DCFS SERVICE QUALITY AND PRACTICE IMPROVEMENT UNIT

2013 APSR ITEMS

Quality Services Peer Reviews (QSPR) are monitoring tools used to evaluate Arkansas' child welfare system that mirrors the onsite Child and Family Services Review (CFSR) instrument and process. The Service Quality and Practice Improvement (SQPI) Unit employs an ongoing, two-pronged annual process for conducting Quality Services Peer Reviews (QSPRs) in each of the Division's ten geographical service areas. A stratified, random sample of thirty cases is drawn from each Area prior to the beginning of the reviews. The manager then assigns a relatively equal proportion of cases to each of the reviewers. The review process begins with an evaluation of the records contained in the Children's Reporting and Information System (CHRIS), Arkansas' SACWIS. The reviewers are then deployed into the county offices for an onsite review. During the onsite review, the physical case files are reviewed and individuals pertinent to the cases are interviewed, e.g. children, parents, foster parents, ad litems, etc. The quality assurance reviewers write up their findings while in the county offices. The manager of the unit reviews all of the reviewers' scoring of the cases in the same way that someone reviews all of the cases in the federal CFSR process. When scores are not sufficiently well documented, staff are required to produce additional justifications for their scores. The intent is to ensure inter-rater reliability and fidelity to the process.

Following the formal rating of the thirty cases in each service area, specific deficient cases are targeted to provide coaching and guidance to caseworkers and supervisors as to how to improve casework and service provision to ensure compliance with all federal and state requirements and conformance with the Arkansas Practice Model. Specifically, coaching sessions are conducted with the caseworkers assigned to the targeted cases to help them internalize the federal standards and the guiding tenants of Arkansas' practice model and its role in practice improvement. It should be noted that this process of conducting coaching sessions in conjunction with the full, scoring round of reviews is new to State Fiscal Year (SFY) 2013. Previously, there were two distinct rounds of cases reviews, the second phase of which involved reviewing four additional cases in three pre-selected counties in each service area and conducting coaching sessions on only those twelve cases. The supplemental QSPRs that were conducted at the beginning of SFY 2013 during the overlapping year of Arkansas's Child and Family Services Review (CFSR) Program Improvement Plan (PIP) to determine if the State met the negotiated goals of improvement for Items 18 and 20 resulted in time and capacity constraints, so the SQPI Unit only conducted coaching sessions in Areas 1, 2 and 7 during the fiscal year. Specifically, coaching sessions were held in Benton and Washington Counties in Area 1, Crawford and Sebastian Counties in Area 2 and Jefferson and Lonoke Counties in Area 7, because these counties comprise a significant proportion of Arkansas's total child welfare population. Beginning in SFY 2014, the SQPI Unit will begin conducting coaching sessions in all ten service areas again.

Following each review, the findings are compiled and a report is generated to convey the results. Each Area is required to develop a practice improvement plan relating to the two issues on which the Area scored lowest, unless the Area passed all issues. Additionally, beginning in SFY 2012, the DCFS Director, the manager of the SQPI Unit and other key members of the Division's executive team began meeting with the area directors and all supervisors from each service area following their QSPR to discuss the findings and particular strengths, needs and areas needing

improvement. This process continued into SFY 2013 and was expanded to include discussions surrounding each Area's meta-analysis and investigative review reports to produce a comprehensive, area-wide examination. All three review/reporting processes were aligned in SFY 2013 so that each service area would receive all three reports at the same time to better inform management decision-making using data. It is expected that this process will continue from hence forward.

SFY 2013 Statewide QSPR / CFSR Comparisons					
	SFY 2013	***SFY 2012***	***SFY 2011***	***SFY 2010***	***2008 CFSR***
SAFETY 1: Children are first and foremost protected from abuse and neglect	**75.23%**	**77%**	**85%**	**76%**	**77%**
ITEM 1: Timeliness of investigations	83.55%	85%	91%	83%	77%
ITEM 2: Repeat maltreatment	85.80%	88%	83%	82%	95%
SAFETY 2: Children are safely maintained in their home when possible and appropriate	**64.00%**	**63%**	**62%**	**60%**	**59%**
ITEM 3: Services to prevent removal	73.00%	70%	67%	62%	68%
ITEM 4: Risk of harm	65.96%	64%	63%	61%	61%
PERMANENCY 1: Children have permanency and stability in their living situations	**64.70%**	**67%**	**66%**	**62%**	**41%**
ITEM 5: Foster care re-entry	97.23%	97%	85%	93%	100%
ITEM 6: Stability of foster care placement	68.26%	74%	69%	74%	64%
ITEM 7: Permanency goal for child	86.25%	90%	92%	84%	72%
ITEM 8: Reunification, guardianship, and placement with relatives	90.54%	78%	88%	85%	72%
ITEM 9: Adoption	54.11%	68%	71%	56%	33%
ITEM 10: Alternative planned permanent living arrangement	69.27%	63%	77%	71%	57%
PERMANENCY 2: The continuity of family relationships and connection is preserved	**66.78%**	**68%**	**67%**	**73%**	**54%**
ITEM 11: Proximity of placement	90.01%	93%	92%	90%	96%
ITEM 12: Placement with siblings	84.93%	75%	83%	92%	82%
ITEM 13: Visiting with parents and siblings in foster care	68.45%	73%	69%	69%	59%
ITEM 14: Preserving connections	78.71%	77%	80%	87%	79%
ITEM 15: Relative placement	77.50%	77%	68%	84%	67%
ITEM 16: Relationship of child in care with parents	68.07%	70%	69%	70%	48%
WELL-BEING 1: Families have enhanced capacity to provide for children's needs	**52.43%**	**48%**	**45%**	**45%**	**28%**
ITEM 17: Needs/services of child, parents and foster parents	64.54%	62%	56%	56%	37%
ITEM 18: Child//family involvement in case planning	60.77%	53%	49%	53%	31%
ITEM 19: Worker visits with child	60.53%	52%	60%	54%	46%
ITEM 20: Worker visits with parents	40.57%	42%	37%	42%	33%
WELL-BEING 2: Children receive services to meet their educational needs	**83.66%**	**80%**	**78%**	**75%**	**71%**
ITEM 21: Educational needs of child	83.66%	80%	78%	75%	71%
WELL-BEING 3: Children receive services to meet their physical & mental health needs	**88.75%**	**79%**	**75%**	**69%**	**62%**
ITEM 22: Physical health of child	93.82%	90%	85%	84%	74%
ITEM 23: Mental health of child	87.56%	77%	74%	68%	67%

Continuous Quality Improvement:

Continuous Quality Improvement Process in Arkansas

A functioning continuous quality improvement (CQI) process is a complete system that supports a child welfare agency's values, vision and mission through ongoing data and information collection and analysis and the regular use of CQI results to make decisions, improve practice, share information with stakeholders and achieve better outcomes for children and families.

Benefits of a functioning CQI process:

- It supports a continuous learning environment and set clear direction and expectations for outcomes and goals.
- Establishes champions of CQI work, as reflected by their decision-making and communications with staff.
- It can provide opportunity for staff at all levels, children, youth, families, and stakeholders to be engaged in CQI processes and activities, including advisory capacities and inclusion in informing agency strategic plans.
- It can help to clarify and articulate values and principles within the agency and to the broader community.
- Provides a platform to regularly communicate and emphasize outcomes, indicators, and standards to staff, children, youth, families, and stakeholders.
- Allows leadership to set expectations that agency staff use results to make improvements.
- Empower supervisors and staff to implement changes in policy, practices, program, and/or training.

CQI is represented in AR Practice Model Principles:

- Practice with families is interrelated at every step of the casework process.
- The entire system must support frontline practice to achieve positive outcomes for families
- Quality improvement and accountability guide all our work
- How we do the work is as important as the work we do

	Foundational Administrative Structure
The State applies the CQI process consistently across the State and the single State agency has oversight and authority over the implementation of the CQI	Arkansas currently utilizes the Quality Services Peer Reviews (QSPR) as a central component of its CQI processes. QSPRs are monitoring tools used to evaluate Arkansas' child welfare system that mirror the onsite Child and Family Services Review (CFSR) methods. The Service Quality and Practice Improvement (SQPI) Unit employs an ongoing, two-pronged annual process for conducting QSPRs in each of the Division's ten geographical service areas. A stratified, random sample of thirty cases is drawn from each Area prior to the beginning of the reviews. The manager then assigns a relatively equal proportion of cases to each of the reviewers. The review process begins with an evaluation of the records contained in

system; there is a systemic approach to review, modify, and implement any validated CQI process.	the Children's Reporting and Information System (CHRIS), Arkansas' SACWIS. The reviewers are then deployed into the county offices for an onsite review. During the onsite review, the physical case files are reviewed and individuals pertinent to the cases are interviewed, e.g. children, parents, foster parents, ad litems, etc. The quality assurance reviewers write up their findings while in the county offices. The manager of the unit reviews all of the reviewers' scoring of the cases in the same way that someone reviews all of the cases in the federal CFSR process. When scores are not sufficiently well documented, staff are required to produce additional justifications for their scores. The intent is to ensure inter-rater reliability and fidelity to the process/protocol. Following the formal rating of the thirty cases in each service area, specific deficient cases are targeted to provide coaching and guidance to caseworkers and supervisors as to how to improve casework and service provision to ensure compliance with all federal and state requirements and conformance with the Arkansas Practice Model. Specifically, coaching sessions are conducted with the caseworkers assigned to the targeted cases to help them internalize the federal standards and the guiding tenants of Arkansas' practice model and its role in practice improvement. Next, the findings are compiled and a report is generated to convey the results. Each Area is encouraged to develop a practice improvement plan relating to the two issues on which the Area scored lowest, unless the Area passed all issues. Additionally, beginning in SFY 2012, the DCFS Director, the manager of the SQPI Unit and other key members of the Division's executive team began meeting with the area directors and all supervisors from each service area following their QSPR to discuss the findings and particular strengths, needs and areas needing improvement. This process continued into SFY 2013 and was expanded to include discussions surrounding each Area's meta-analysis and investigative review reports to produce a comprehensive, area-wide examination. All three review/reporting processes were aligned in SFY 2013 so that each service area would receive all three reports at the same time to better inform management decision-making using data to further build upon the State's CQI processes. The QSPR Manager is actively involved in a variety of professional development activities. This includes strengthening supervision, coaching practices, and

	accountability. DCFS also plans to strengthen the follow up on recommendations from special studies conducted by HZA. The 3 C's Commit workgroup is working on a revision of the Supervisory Review tool to develop something more user-friendly and outcome-oriented.
The State establishes written and consistent CQI standards and requirements for the State, counties, and any other public agencies operating title IV-E programs on behalf of the State, as well as any private agencies with case management responsibilities.	AR Practice Model Guiding Principles provides the framework for CQI standards. The QSPR process mirrors the CFSR standards and onsite review methods. All of the State's CQI standards center on family-centered, community-based services designed to meet the needs of individual families. -Since SFY 2010 DCFS has been conducting contract monitoring reviews of many of its service providers. These reviews have been part of the Division's comprehensive effort to improve the quality of its service delivery system as well as the outcomes it achieves for children and families. During previous years DCFS has reviewed its residential treatment facilities, therapeutic foster homes, sexual offender treatment programs, outpatient counseling agencies, intensive family service providers, and psychological evaluation providers. For SFY 2013, DCFS made a conscious effort to review (1) the performance of the state's Child Abuse Hotline, which is operated by and housed within the Arkansas State Police, as well as (2) its newly implemented and internally operated differential response (DR) program. Arkansas also has a child welfare licensing unit that has established standards for monitoring private agency service providers. DCFS has been collaborating with the licensing unit to bolster the CQI process.
There is an approved training process for CQI staff, including any contractor or stakeholder staff conducting CQI activities.	The manager of the Service Quality and Practice Improvement Unit trains all new and current quality assurance reviewers on the QSPR process using CFSR training materials and guided case reviews. The measures and review processes are explored prior to the manager accompanying the reviewer into the field for actual case reviews, with the reviewer first as the observer and then as the executor. The manager reads all case rankings and write-ups to ensure compliance with protocols and inter-rater reliability. This quality assurance process also allows the manager to provide case-specific feedback to the reviewers continually throughout the year. Arkansas continues to assess its capacity to engage other stakeholders in the review process, as we know that is a key element of an effective CQI system.
There are written policies,	The Service Quality and Practice Improvement Unit is working to draft its written protocols with an estimated completion date of June 30, 2014. The QSPR process mirrors the CFSR

procedures, and practices for the CQI process even when the State contracts out any portion of the CQI process.	standards and onsite review methods.
There is evidence of capacity and resources to sustain an ongoing CQI process, including designated CQI staff or CQI contractor staff.	The Service Quality and Practice Improvement Unit is administered by HZA, including a contracted quality assurance manager and four quality assurance reviewers (two contract and two State).
	Quality Data Collection:
The State's case level data shows that the instruments and ratings are completed in a way that is consistent with the instrument instructions and consistent across reviewers.	The manager of the Service Quality and Practice Improvement Unit reviews all of the reviewers' scoring of the cases in the same way that someone reviews all of the cases in the federal CFSR process. When scores are not sufficiently well documented, staff are required to produce additional justifications for their scores. The intent is to ensure inter-rater reliability and fidelity to the process/protocol.
There is a clear process that the State uses to collect and extract accurate quantitative and qualitative data, and the process is consistently	DCFS utilizes several strategies to assess the effectiveness of its staff, services, and programs as well as to ensure that those they lead to improved outcomes for children and families. DCFS develops a number of reports, evaluations and other mechanisms to measure the quality of its services. In particular, the Division makes concerted efforts to monitor its staff in relation to best case practice, and it identifies areas of strength in practice as well as areas needing improvement. Agency staff ensure that the development of any new reports or other methodologies are in line with CFSR benchmarks and the goals outlined in the Division's previous Program Improvement

and properly implemented across the entire State. The collection and extracting processes are documented, and an audit mechanism is in place to verify that the process is being followed.	Plan (PIP). An increasing number of the Division's reports are being built around the three core goals of child welfare—child safety, permanency and well-being—while also considering and accounting for other factors that might support or even impede these goals. Reports generally track performance over time, as well as compare performance to federal standards when applicable. Please refer to the reports described on pages 281-284.
There is a clear process that the State uses to identify and resolve data quality issues and informs CB as appropriate regarding data quality issues. For example, there are processes to: identify if data are being under-/over-reported and/or not being entered into the State's information system; evaluate if data entry is reliable or unreliable, and if unreliable, why; (e.g. clarity of instructions,	AR has monthly CHRIS/SACWIS meetings with the CHRIS support staff and executive team to discuss the challenges the field is having, jointly plan and prioritize CHRIS changes. CHRIS staff have provided an opportunity for CHRIS users to enter suggestions and/or comments related to data issues, user friendliness, etc. of the system. CHRIS staff as well as program staff participate in the monthly SACWIS conference calls to discuss SACWIS requirement and enhancements completed each quarter. The CHRIS staff have regular communication with the Children's Bureau related to AFCARS and NYTD. When submitting the federal SACWIS reports, CHRIS staff and the program staff meet and discuss the data prior to submission to assure accuracy. The CHRIS staff also provide updates on enhancements and changes via email to all DCFS staff who in turn provide feedback on the functionality of the changes or if there's any other issues.

definitions, and/or data entry screens).	
There is a process in the State for the collection of quantitative and qualitative data that addresses key issues important to the State and demonstrates how the State is functioning on systemic factors, such as training staff and resource parents, functioning of the case review system, and service array.	As part of an effort to measure performance and outcomes on a localized basis, DCFS conducts an annual meta-analysis of each of its ten Service Areas. As such, DCFS compiles, analyzes and reviews data regarding the children and families it serves within each Service Area, as well as measures the outcomes it achieves for the corresponding service population. Much like the federal Child and Family Services Review (CFSR), the primary issues on which this analysis focuses are safety, permanency and well-being; but it also places an emphasis on the personnel, contractual and foster care resources available to achieve these outcomes. The intent of these reports is to identify those practices and outcomes where each Service Area is producing well and can serve as a model for other Areas, as well as those practices and outcomes where each Area most needs to improve. At the conclusion of the ten Area-specific meta-analysis reports, DCFS also completes a statewide meta-analysis that measures DCFS' progress and overall transition over the most three recently completed calendar years. For SFY 2013, the Meta-Analysis reports continued to place a strong emphasis on performance at the county level for man of its measures. Focusing on local performance allows the Division to better identify and understand where casework is excelling and other counties where improvement is needed
The State monitors existing federal requirements or guidelines and uses appropriate quality utilities and tools to ensure that data is accurate, including, but not limited to: o The most recent AFCARS Assessment Review	The CHRIS staff use the data utilities available and work on feedback from Children's Bureau central office regarding AFCARS and NCANDS submissions. The CHRIS staff are also working on corrective action regarding our NYTD data so that it is in compliance with requirements and coordinates that planning with the Children's Bureau central office.

findings documents and/or AFCARS Improvement Plan (AIP), if applicable, indicates whether the State is accurately collecting, mapping, and extracting the AFCARS data in accordance with the requirements in the AFCARS regulation at 45 CFR 1355.40 and steps the State is to take to correct its AFCARS collection. This includes steps to improve the accuracy of the data through ongoing training, oversight, and incorporation into a quality assurance process. **o The most recent NCANDS data, or other safety data that impact the outcome indicators being**	

measured, meet any CB quality guidelines. **o The most recent data profile used for the CFSR accurately reports the status of the child welfare program as indicated by data errors falling below acceptable thresholds.** **o NYTD data meets the regulatory requirements at 45 CFR 1356.80 – 86 and other CB quality guidelines.**	
	Case Record Review Data and Process
The State reviews cases of children based on a sampling universe of children statewide who are/were recently in foster care and children statewide who are/were served in their own homes. Samples should be sufficiently large enough to make statistical	The Service Quality and Practice Improvement (SQPI) Unit employs an ongoing, two-pronged annual process for conducting QSPRs in each of the Division's ten geographical service areas. A stratified, random sample of thirty cases is drawn from each Area for the reviews. The cases are stratified among case type, permanency goal and county and include varying ages and demographics and are representative of the children and youth served by each respective service area.

inferences about the population served by the State. The universe of cases reviewed will also include the title IV-B and IV-E child population directly served by the State agency, or served through title IV-E agreements (e.g. with Indian Tribes, juvenile justice, or mental health agencies).	
The sample is stratified to include a proportion of cases that reflect different age groups, permanency goals, and other considerations, such as varying geographic areas of the State, as appropriate.	The Service Quality and Practice Improvement (SQPI) Unit employs an ongoing, two-pronged annual process for conducting QSPRs in each of the Division's ten geographical service areas. A stratified, random sample of thirty cases is drawn from each Area for the reviews. The cases are stratified among case type, permanency goal and county and include varying ages and demographics and are representative of the children and youth served by each respective service area.
The State conducts case reviews on a schedule that takes into consideration	Quality Services Peer Reviews are a central component of Arkansas's CQI processes. The SQPI Unit employs an ongoing, two-pronged annual process for conducting QSPRs in each of the Division's ten geographical service areas. A stratified, random sample of thirty cases is drawn from each Area for the reviews. The cases are stratified among case type, permanency

representation of the populations served by the State, including the largest metropolitan area, and the significance of other demographic and practice issues.	goal and county and include varying ages and demographics and are representative of the children and youth served by each respective service area.
Case reviews collect specific case-level data that provides context and addresses agency performance.	Following the formal rating of the thirty cases in each service area during the QSPRs, specific deficient cases are targeted to provide coaching and guidance to caseworkers and supervisors as to how to improve casework and service provision to ensure compliance with all federal and state requirements and conformance with the Arkansas Practice Model. Specifically, coaching sessions are conducted with the caseworkers assigned to the targeted cases to help them internalize the federal standards and the guiding tenants of Arkansas's practice model and its role in practice improvement. DCFS contracts with Hornby Zellar and Associates for program monitoring and special studies. The reports and evaluations that this contract staff provide are described on pages 281-284 and contribute significantly to the CQI. DCFS Child Protective Service Manager conducts case reviews of completed investigations to assess compliance and quality of investigation practice across the state. These reviews include both unsubstantiated and substantiated findings. The results of this CPS review are provided in an executive summary that is discussed with each Area Director and their staff as well as executive team to problem solve and/or address the challenges.
Case reviews are able to detect the quality of services for the children and families served and therefore focus on the assessment and	The QSPR process begins with an evaluation of the records contained in CHRIS. The reviewers are then deployed into the county offices for the onsite review. During the onsite review, the physical case files are reviewed and individuals pertinent to the cases are interviewed, e.g. children, parents, foster parents, ad litems, etc. The quality assurance reviewers score the cases and write up their findings based on the totality of information collected during the review. Both the quantitative and qualitative data collected are used to describe the effectiveness of agency interventions and services

monitoring of how child and family functioning is progressing in relation to the services provided.	
Case reviews include the completion of interviews specific to each case, such as the child/youth, birth parent, caregiver, caseworker or supervisor, and as indicated, health, mental health and other service providers, educators, and guardian ad litem (or child's attorney).	During the QSPR onsite review, the physical case files are reviewed and individuals pertinent to the cases are interviewed, e.g. children, parents, foster parents, ad litems, etc.
Case reviews are conducted by staff who go through a uniform and consistent training process and whom the State determines are qualified to conduct reviews, with a preference for staff and stakeholders with direct service	The manager of the Service Quality and Practice Improvement Unit trains all new and current quality assurance reviewers on the QSPR process using CFSR training materials and guided case reviews. The measures and review processes are explored prior to the manager accompanying the reviewer into the field for actual case reviews, with the reviewer first as the observer and then as the executor. The manager reads all case rankings and write-ups to ensure compliance with protocols and inter-rater reliability. This quality assurance process also allows the manager to provide case-specific feedback to the reviewers continually throughout the year. Quality assurance reviewers typically have advanced degrees and experience in the field of child welfare. Direct practice and/or quality assurance experience are standard.

experience.	
The process prevents reviewer conflict-of-interest and promotes third-party (unbiased) review of cases, i.e. cases are not reviewed by caseworker or supervisor responsible for cases or who had previous involvement in the cases, as well as those who may have a personal interest in the case.	The Service Quality and Practice Improvement Unit is administered by HZA, including a contracted quality assurance manager and four quality assurance reviewers (two contract and two State). AR outsources the CPS manager position who is responsible for the investigative case reviews that are conducted to assure compliance and quality of investigations. By having a contract provider conduct the CPS reviews, it allows a process that promotes an unbiased assessment of the compliance and quality of Arkansas investigations. The skills and experiences of the Hornby Zellar executive team also provides recommendations that may not typically be considered by the State.
Policies, written manuals, and instructions exist to assist in standardizing completion of the instruments and the implementation of the case review process.	The Service Quality and Practice Improvement Unit is working to draft its written protocols with an estimated completion date of June 30, 2014. The QSPR process mirrors the CFSR standards and onsite review methods.
Inter-rater reliability procedures are implemented to ensure consistency of case ratings among reviewers.	The manager of the Service Quality and Practice Improvement Unit reviews all of the reviewers' scoring of the cases in the same way that someone reviews all of the cases in the federal CFSR process. When scores are not sufficiently well documented, staff are required to produce additional justifications for their scores. The intent is to ensure inter-rater reliability and fidelity to the process/protocol.
There is a	DCFS utilizes several strategies to assess the effectiveness of

process for conducting ad hoc/special reviews targeting specific domains when analysis and other data warrant such reviews.	its staff, services, and programs as well as to ensure that those lead to improved outcomes for children and families. DCFS develops a number of reports, evaluations and other mechanisms to measure the quality of its services. In particular, the Division makes concerted efforts to monitor its staff in relation to best case practice, and it identifies areas of strength in practice as well as areas needing improvement. Agency staff ensure that the development of any new reports or other methodologies are in line with CFSR benchmarks and the goals outlined in the Division's previous Program Improvement Plan (PIP). An increasing number of the Division's reports are being built around the three core goals of child welfare—child safety, permanency and well-being—while also considering and accounting for other factors that might support or even impede these goals. Reports generally track performance over time, as well as compare performance to federal standards when applicable. DCFS expects to continue utilizing its data in its efforts to connect its evaluations to performance and best case practice. The following list of reports and projects (and accompanying descriptions) accounts for the major quality assurance activities undertaken in Arkansas during SFY 2013: <u>Family Preservation Services Evaluation</u> – DCFS conducts this evaluation on an annual basis, in accordance with state law. The goal of family preservation services (FPS) is to keep families intact (prevent the removal of children from home) or achieve reunification expeditiously (if children are in foster care). This evaluation describes the proportion of families and children who need services; the proportion who subsequently receive services; and then tracks their progress at specific intervals after receiving those services. The report also examines the impact that services have in terms of preventing future involvement with the agency. <u>Program Monitoring</u> – Since SFY 2010 DCFS has been conducting contract monitoring reviews of many of its service providers. These reviews have been part of the Division's comprehensive effort to improve the quality of its service delivery system as well as the outcomes it achieves for children and families. During previous years DCFS has reviewed its residential treatment facilities, therapeutic foster homes, sexual offender treatment programs, outpatient counseling agencies,

	intensive family service providers, and psychological evaluation providers. For SFY 2013, DCFS made a conscious effort to review (1) the performance of the state's Child Abuse Hotline, which is operated by and housed within the Arkansas State Police, as well as (2) its newly implemented and internally operated differential response (DR) program. The review of the Child Abuse Hotline, DCFS discovered that the Hotline generally does a good job of screening calls consistently and categorizing allegations accurately, all the while providing quality customer service. However, there were some noteworthy exceptions that the study was able to bring to light; and as a result, the recommendations that were made included enhancing the Hotline's internal quality assurance process and better prepare callers for the types of information that they will have to provide. For its review of DR, a program intended to respond to maltreatment reports that allege traditionally low-risk allegations through a voluntary and family-led approach, DCFS found that the program—while taking less time to administer than a traditional investigation—is often not leading to the delivery of services to these families, since most families decline to participate. This information, in conjunction with other findings, will help the Division continue to shape and mold the program as it prepares to be implemented statewide in October 2013. <u>Summary of Garrett's Law Referrals</u> – On an annual basis, DCFS completes an analysis of Garrett's Law referrals received during the most recently completed state fiscal year. Garrett's Law refers to a bill enacted in 2005 that intended to address situations in which a mother gives birth to a child, and either the mother or the newborn is found to have an illegal substance in his or her system. According to the law, the presence of an illegal substance in either the mother or newborn is sufficient to substantiate an allegation of neglect. This study presents information on the Garrett's Law referrals received from SFY 2009 through SFY 2012. The report presents information regarding the number of Garrett's Law referrals received annually; the types of drugs cited in these referrals; how DCFS responds to Garrett's Law referrals; and whether the parents involved in these referrals receive any type of treatment.
	Analysis and Dissemination of Quality Data
The State has consistent	Arkansas currently utilizes the QSPRs as a central component of its CQI processes. The SQPI Unit employs an ongoing, two-

mechanisms in place for gathering, organizing, and tracking information and results over time regarding safety, permanency, well-being outcomes and services (at the child, caseworker, office, regional and state level, as appropriate) .	pronged annual process for conducting QSPRs in each of the Division's ten geographical service areas. The findings from each review are compiled and a report is generated to convey the results. Each Area is encouraged to develop a practice improvement plan relating to the two issues on which the Area scored lowest, unless the Area passed all issues. A statewide performance report is issued at the end of each round of reviews and compares the current performance with that from previous years. Additionally, the DCFS Director, the manager of the SQPI Unit and other key members of the Division's executive team meet with the area directors and all supervisors from each service area following their QSPR to discuss the findings and particular strengths, needs and areas needing improvement. Each Area's meta-analysis and investigative review reports are also discussed to produce a comprehensive, area-wide examination. The Compliance Outcome Report (COR) represents a monthly report that assesses the performance of DCFS caseworkers in divisional and regional areas. Specifically, the COR measures 35 indicators that represent standard casework or case-related activities, many of which must comply with state regulatory requirements.
The State has a defined process in place for analyzing data (both quantitative and qualitative), and the State provides training to staff and determines that they are qualified to conduct such analyses.	The Service Quality and Practice Improvement Unit is administered by HZA, including a contracted quality assurance manager and four quality assurance reviewers (two contract and two State). The manager of the Service Quality and Practice Improvement Unit trains all new and current quality assurance reviewers on the QSPR process using CFSR training materials and guided case reviews. The measures and review processes are explored prior to the manager accompanying the reviewer into the field for actual case reviews, with the reviewer first as the observer and then as the executor. The manager reads all case rankings and write-ups to ensure compliance with protocols and inter-rater reliability. This quality assurance process also allows the manager to provide case-specific feedback to the reviewers continually throughout the year. Quality assurance reviewers typically have advanced degrees and experience in the field of child welfare. Direct practice and/or quality assurance experience are standard.
The State aggregates Statewide and local data and makes it available to	**Compliance Outcome Report (COR) –** The COR represents a monthly report that assesses the performance of DCFS caseworkers in divisional and regional areas. Specifically, the COR measures 35 indicators that represent standard casework or case-related activities, many of which must comply with state regulatory requirements.

stakeholders for analysis.	**<u>Quarterly Performance Report (QPR)</u> –** The Quarterly Performance Report (QPR) is a statistical report created for legislative committees dealing with the youth and children who are involved with DCFS. The report is completed quarterly for the state fiscal year and consists of three components: a compliance index, performance indicators, and a description of population and services**.** **<u>Annual Report Card (ARC)</u>** – The Annual Report Card (ARC) is a statistical report that is also created for legislative committees dealing with youth and children involved with DCFS. The ARC is reported for each a state fiscal year and is structured similar to the QPR. The report deals with the demographics of the population served by DCFS and documents any observable trends over time. **<u>Meta-Analysis</u> –** As part of an effort to measure performance and outcomes on a localized basis, DCFS conducts an annual analysis of each of its ten Service Areas. As such, DCFS compiles, analyzes and reviews data regarding the children and families it serves within each Service Area, as well as measures the outcomes it achieves for the corresponding service population. Much like the federal Child and Family Services Review (CFSR), the primary issues on which this analysis focuses are safety, permanency and well-being; but it also places an emphasis on the personnel, contractual and foster care resources available to achieve these outcomes. The intent of these reports is to identify those practices and outcomes where each Service Area is producing well and can serve as a model for other Areas, as well as those practices and outcomes where each Area most needs to improve. At the conclusion of the ten Area-specific meta-analysis reports, DCFS also completes a statewide meta-analysis that measures DCFS' progress and overall transition over the most three recently completed calendar years. For SFY 2013, the Meta-Analysis reports continued to place a strong emphasis on performance at the county level for man of its measures. Focusing on local performance allows the Division to better identify and understand where casework is excelling and other counties where improvement is needed.
Agency decision makers, courts, tribes, and other	The DCFS Director, the manager of the SQPI Unit and other key members of the Division's executive team began meeting with the area directors and all supervisors from each service area following their QSPR to discuss the findings and particular strengths, needs and areas needing improvement. This process

stakeholders are involved in analyzing and understanding the data and in providing feedback on analysis and conclusions.	continued into SFY 2013 and was expanded to include discussions surrounding each Area's meta-analysis and investigative review reports to produce a comprehensive, area-wide examination. All three review/reporting processes were aligned in SFY 2013 so that each service area would receive all three reports at the same time to better inform management decision-making using data to further build upon the State's CQI processes. The DCFS Director meets on a monthly basis with the AOC Director to discuss updates and/or any challenges that have been shared at their level. The DCFS Director has direct access to the Judges as specific issues arise and will often coordinate and meet one on one with the Judges to try and problem solve any issues on either side. Please see pages 3 -14 for further stakeholder involvement.
The State translates results (trends, comparisons and findings) for use by courts, tribes, and a broad range of stakeholders, and the State disseminates results through understandable or reader-friendly reports, websites, etc.	DCFS provides the QPR and the ARC to the legislative committee as they are completed. All of Arkansas's data reports from the last 5 years are accessible to the public and posted on the following website: **http://humanservices.arkansas.gov/dcfs/Pages/StateFederal-Reports.aspx** As DCFS staff are invited and participate in local committee meetings, events, etc. they provide statistical data to these groups that are relevant to their groups and/or county.
	Feedback to Stakeholders and Decision-makers and Adjustment of Programs and Process
Results (i.e., trends, comparisons and findings) are used by agency leadership/top management, courts, tribes, entities with title IV-E agreements,	DCFS and the Administrative Office of the Courts (AOC) are engaged in a project to share client information of mutual clients among each system. As part of the information share, scanned court documents entered in the AOC information system, called DNet (Dependent Neglect) are now available as a pilot in CHRIS. The DNet Court Documents link is on the Court Hearing Detail screen so staff can view the actual Court Order, Admitted Documents, and Shared Documents. There are 7 pilot counties testing this new access. They are: Pulaski, Sebastian, Washington, Benton, Carroll, Lonoke, and Miller. In May 2013, representatives from DCFS and AOC attended a forum sponsored by the National Resource Center for Child

and other stakeholders to help guide collaborative efforts, inform the goals and strategies of the CFSP and other State plans for federal funds such as the Court Improvement Program strategic plan, and to improve practice, services and monitor/track progress toward goals.	welfare data and technology to assist in collaborative efforts for CQI. As a result of this meeting two AOC (their Data Specialist and Court Improvement Coordinator) attend the DCFS Permanency team meetings. The permanency team serves as a way to assess continues quality improvement. This year, the team has analyzed data reports related to length of time in care, case plan goals, when established, steps to permanency, challenges to permanency assign for follow up are made and brought back to team for discussion on what is needed to support the work. For example the Assistant Director developed a template that each Area Director submits with their monthly report to provide updates and activities that reflect their efforts to place siblings together.
Supervisors and field staff understand how results link to daily casework practices; results are used by supervisors and field staff to assess and improve practice.	The findings from each QSPR are compiled and a report is generated to convey the results. Each Area is encouraged to develop a practice improvement plan relating to the two issues on which the Area scored lowest, unless the Area passed all issues. A statewide performance report is issued at the end of each round of reviews and compares the current performance with that from previous years, as do the individual area reports. Additionally, the DCFS Director, the manager of the SQPI Unit and other key members of the Division's executive team meet with the area directors and all supervisors from each service area following their QSPR to discuss the findings and particular strengths, needs and areas needing improvement. Each Area's meta-analysis and investigative review reports are also discussed to produce a comprehensive, area-wide examination. Discussions include strengths, challenges, trends, innovative practices and problem solving. DCFS has implemented Learning Circles in several of the counties to have a structured forum to problem solve at the local level and to implement strategies for CQI.
Results are used to inform training, policy,	The Training Skills and Development Team (TSDT) operates much like a steering committee by helping the division/academic partners create and implement supportive strategies related to program improvement goals.

practice, community partnerships, service array (service gaps, quality, etc.), automated system development, and other supportive systems.	<u>Roles and Responsibilities of TSDT Members</u> • Provide oversight for DCFS training initiatives. • Define standard training (material development, course deployment and on-the-job) protocols. • Identify issues affecting overall skill application in the field. For example; systemic barriers, employee knowledge/skills, supervisory supports, etc. • Create strategies to enhance Practice Model skill applications. *A Learning Circle* (LC) is a change management tool used by groups engaged in a process of learning through collaborative problem-solving. Learning occurs as the group explores issue relevant to them, resulting in decisions that support meaningful change. The process itself is supported by guiding principles which are aligned strongly with the necessary conditions needed to foster a learning culture. These conditions are: • The recognition and acceptance of differences; • The provision of timely, clear feedback; • The pursuit of new ways of thinking and untapped sources of information; • The acceptance of errors, mistakes, and occasional failures as the price of improvement. LC's are facilitated by a group leader, group members are accountable to one another, and the goal is to improve outcomes by improving how things are done (our system) and what we are doing (our practice). Each 1st Thursday DCFS executive staff and CHRIS staff has a CHRIS meeting to discuss pending items and determine prioritization and due dates for enhancements. Meeting minutes are taken and those can be reviewed on-site. Please see pages 200 to204 (IV-E demonstration waiver) for other strategies AR is implementing to improve outcomes with children and families and will be integrated into our CQI system.
The CQI process itself is adjusted as	The QSPR Manager actively engages with program and executive staff and assesses any revisions needed to the QSPR tool. As revisions are made, they are included in the current

needed over time as results indicate a need for additional study, information and/or analysis.	tool and training is provided to assure consistent analysis and documentation of the revision. The Assistant Director meets one on one on a quarterly basis with each of the Area Director's to discuss the data reports and the trends for their areas and gather feedback on the strengths and challenges that eh Area Directors have identified. As a part of this meeting there are often action steps developed for the Area Director to implement to improve upon practices or improve their data trends. The DCFS Director, the manager of the SQPI Unit and other key members of the Division's executive team meet with the area directors and all supervisors from each service area following their QSPR to discuss the findings and particular strengths, needs and areas needing improvement.

Child Welfare Waiver Demonstration Activities

Overview

The Arkansas Department of Human Services, Division of Children and Families Services' (DCFS) demonstration project will provide statewide child welfare services in both in-home and out-of-home cases. The demonstration includes an array of evidence-based and evidence-informed practices and programs (EBP and EIP) proven to foster improved outcomes related to safety, permanency and well-being for children and their families. The focus on EBPs or EIPs strengthens the ongoing implementation of the goals and guiding principles of the DCFS Practice Model through a comprehensive expansion of practice beginning at the investigation phase and continuing through post-reunification services and/or legal permanence. Through its demonstration, DCFS plans to safely reduce the number of children entering foster care, increase placement stability for children in care, and achieve timely permanence for youth by implementing various service interventions, including:

- Child and Adolescent Needs and Strengths (CANS)
- Team Decision-Making
- Nurturing Parenting Program
- Differential Response
- Targeted Foster Family Recruitment
- Permanency Roundtables

By implementing the interventions listed above, Arkansas anticipates an enhancement of its child welfare system to one that values families by:

- Engaging families and encouraging them to have a voice in decisions regarding their cases;
- Serving children and families in their homes when possible;

- Working to ensure children's time in foster care is limited so that every child has timely permanence.
- Providing readily available services to help produce the best possible outcomes for the families served by the system.

Arkansas will also continue strengthening current initiatives already implemented. These initiatives include:

- Sustaining Structured Decision-Making;
- Creating a Trauma-Informed Workforce and Service Delivery System; and,
- Developing an In-Home Services Program.

Target Populations

The comprehensive target population for Arkansas's demonstration project will include all children and families in need of child welfare services statewide. Specifically, the children and families targeted to receive waiver funds will be all children referred for child abuse and neglect or already receiving services during the waiver period regardless of removal status, placement types, services provided, or eligibility for public assistance. DCFS expects that children and families from all 75 counties within the state will be served through the demonstration project. Each of the Division's ten geographical service areas will benefit from programs, services, and interventions funded by the waiver.

Although Arkansas's broader target population is inclusive of all client types statewide, specific goals and interventions will concentrate on precise groups of children and families dependent upon their characteristics and needs as borne out in the State's abundance of data. The particular clients for which each intervention is intended will be spelled out in Section III. However, a summation of the target populations by each of Arkansas's three goals is below:

- Goal 1: Safely reduce the number of children entering foster care
  - Children in foster care 0-90 days (short-stayers)
  - Children 0-11 years of age
- Goal 2: Increase placement stability
  - Children with multiple placement changes
  - Children in counties with high numbers of placement changes
- Goal 3: Expedite permanency for children in foster care
  - Children in foster care 91 days to 12 months
  - Children in care 18 months or longer (long-stayers)
  - Children 11 years of age and older
  - Children and youth with behavioral and emotional issues

Demonstration Components and Associated Interventions

Arkansas's demonstration project consists of the following three broad components/goals and six associated interventions:

- Goal 1: Safely reduce the number of children entering foster care
  - Differential Response
  - CANS
  - Nurturing Parenting Program
  - Team Decision-Making
- Goal 2: Increase placement stability

- Targeted Foster Family Recruitment
- CANS

❖ Goal 3: Expedite permanency for children in foster care
- CANS
- Nurturing Parenting Program
- Permanency Roundtables

Although some of these interventions overlap multiple goals and may impact different populations, implementing them in this manner will help achieve the proposed statewide outcomes.

Descriptions of each of the interventions and how they will address the various needs of the target populations are included below:

Differential Response:

Expected Short-term Outcomes:

1) Stakeholder and community education and awareness about Differential Response and the importance of safely maintaining children in their own home whenever possible.
2) Families receive appropriate supports and services in a timely manner.

Expected Intermediate Outcomes:

1) Caregivers have increased capacity to meet the needs of and provide a safe and stable environment for their children.
2) Families are valued.

Expected Long-term Outcomes:

1) Communities are engaged and better able to meet the needs of children and families in their communities.
2) Families are healthier, experience success, and have less reliance on the child welfare system.
3) The number of children entering foster care for short periods of time decreases.

Child and Adolescent Needs and Strengths (CANS)

Expected Short-term Outcomes:

1) Case plans address the highest priority needs of children and families.
2) Families receive appropriate supports and services in a timely manner.
3) Gaps in service array regarding evidence-based services are identified.

Expected Intermediate Outcomes:

1) Caregivers have increased capacity to meet the individual needs of children in their care.
2) Family functioning is improved.
3) Availability of evidence-based services increases.

Expected Long-term Outcomes:

1) Caregivers take responsibility for and commit to the changes needed to provide for the safety and stability of their children.
2) The number of children entering foster care decreases.
3) Permanency is achieved in the shortest amount of time possible.

Nurturing Parenting Program

Expected Short-term Outcomes:

1) Caregivers have increased knowledge of age-appropriate expectations and positive parenting techniques.
2) Caregivers are connected with community supports to assist with meeting the individual needs of their children.

Expected Intermediate Outcomes:

1) Caregivers demonstrate learned, positive parenting techniques.
2) Caregivers have increased parenting capacity.

Expected Long-term Outcomes:

1) The number of children entering foster care decreases.
2) Permanency is achieved earlier for children in foster care.

Team Decision-Making (TDM)

Expected Short-term Outcomes:

1) Families receive appropriate supports and services in a timely manner.
2) Families are linked to community-based resources and informal and natural supports that best meet their needs.
3) Participants accurately identify steps needed to connect children to lifelong supports.

Expected Intermediate Outcomes:

1) Caregivers have increased capacity to meet the individualized needs of and provide a safe and stable environment for their children.
2) Family functioning is improved.
3) Involvement of caregivers in case plan and services increases.

Expected Long-term Outcomes:

1) The number of children entering foster care decreases.
2) Placement stability for children in foster care improves.

Targeted Recruitment

Expected Short-term Outcomes:

1) Increased number of available, quality foster homes.

Expected Intermediate Outcomes:

1) Children are placed in foster homes equipped to meet their individualized needs.

Expected Long-term Outcomes:

1) Placement stability of children in care is increased.
2) Permanency is achieved earlier for children and youth in foster care.

Permanency Roundtables (PRT)

Expected Short-term Outcomes:

1) Participants accurately identify the permanency status of youth in care.

2) Participants accurately identify the steps needed to connect children to life-long supports.
3) Participants identify systemic issues preventing timely permanence for individual youth.

Expected Intermediate Outcomes:

1) More youth make life-long connections.
2) The individualized needs of children and youth are met.
3) Division resolves reoccurring systemic issues preventing permanency for youth.

Expected Long-term Outcomes:

1) Practices pertaining to permanency are improved through proactive case management.
2) Permanency is achieved earlier for children and youth in foster care.

AR submitted the Initial Design and Implementation Plan April 8, 2013 and on June 14, 2013 submitted the Responses to the Federal Partners (next quarterly report would have been due July 8, 2014) along with the completed Evaluation Plan. We have received the feedback on the Evaluation Plan and are reviewing. We continue with phone conferences to determine if we can implement prior to October 2013. Our next update report is due October 8, 2013. Once our Demonstration if approved, reporting is semiannual.

ARKANSAS CAPTA PLAN

The Arkansas CAPTA State Plan assures that Arkansas directs funding to the CAPTA allowable and required programmatic areas. A varied collaboration of stakeholders developed this plan throughout the year utilizing multiple strategies. Stakeholders included, but were not limited to: community based providers; court personnel; Division of Children and Family Services (DCFS) field staff; foster parents; youth in foster care; families who receive services; and other child-serving divisions and agencies (e.g., Division of Youth Services, Division of Disabilities Services).

Strategies to elicit feedback and identify needs included: surveys; focus groups; individual meetings; contract monitoring activities; Quality Service Peer Review (QSPR) interviews; and unsolicited letters/correspondences to DCFS.

Steering committees comprised of internal and external stakeholders guided new initiatives from development to implementation to follow up.

Arkansas annually reviews and revises plans to reflect any changes in the State's strategies or programs and so note in the APSR as well as directly notify the Regional Office (RO) for Arkansas.

There were no laws or regulations that would negatively impact CAPTA eligibility. Effective July 27, 2011 there were statues established to allow for development and implementation of:

- Differential Response System (DRS);
- Requirements for referral of services for children diagnosed with Fetal Alcohol Spectrum Disorder (FASD);
- Plan of safe care.

The CAPTA State Plan for Arkansas will continue to align with the strategic plan developed and implemented to continually improve child welfare services and child and family outcomes in Arkansas.

Arkansas CAPTA Coordinator (State Liaison Officer) may be contacted at Linda.Robinson@arkansas.gov P.O. Box 1437 Slot S569 Little Rock, AR 72203

CAPTA funding specifically supports

- *Case management including ongoing case monitoring and delivery of services and treatment to children and their families through:*
  - Family Treatment Program contracts which provide parents and caregivers of sexually abused children with treatment services (assessment, diagnostic, interview, psychiatric review, and individual/group psychotherapy);
  - Intensive Family Services (IFS) contracts;
  - Funding for 2 Citizen Review Panels;
  - Statewide Language Interpreter Services contracts for county staff with families who are not proficient in English.

  Interpretation and telephone services are provided 24 hours a day, seven days a week. This service also assists staff in document translation. The contract continues to provide translation services for legal documents, as well as some of DCFS publications. There are no planned changes to this service.

- *Developing, strengthening, and facilitating training topics including:*
  - Research based strategies and differential response to promote collaboration with the families;
  - Legal duties/activities of DCFS staff;
- *Developing, implementing, or operating programs to assist in obtaining or coordinating necessary services for families of disabled infants with life threatening conditions including:*
  - Social and health services;
  - Financial assistance;
  - Services necessary to facilitate adoptive placement of any such infants who have been relinquished for adoption through an agreement with the Arkansas Chapter of Pediatrics for the availability of a physician to assist in responding to "Baby Doe" reports.
- *Developing and delivering information to improve public education relating to the role and responsibility of the child protection system and the nature and basis for reporting suspected incidents of child abuse and neglect through:*
  - Child abuse prevention materials and promotional items distribution;
  - Prevention website updates;

The following strategy plan for year FY 2014 will incorporate additional requirements into policy and practice

Goal: Address Fetal Alcohol Spectrum Disorder in referral for services when identified.

1) Educate health care providers of new requirements through development of educational materials. DCFS PUB 99 was developed to explain the new CAPTA reporting law for health care providers. These materials are presented regularly at trainings, conferences, and through community groups. The Pub is available on SHARE for DCFS staff to access.
2) Transition current FASD Project protocols (project initially funded by a grant through SAMSHA) into policy and practice to include FASD awareness, prevention, and

screening, referral for assessment and diagnosis, and referral for intervention services. FASD program has transitioned fully into the central office and now covers the entire state. Policy has been developed for the new CAPTA reporting law, which includes newborns and infants affected by alcohol to the hotline staff. Fields have been developed in CHRIS for the CAPTA referral system, and training material along with the brochure (PUB 99) has been developed and is used to train staff. In addition, staff can refer clients for an FASD screening and assessment if they have concerns that their client is symptomatic of an FASD. The age range has been expanded to include all children birth to age 18 – referral forms can be found on SHARE.

3) Update policy and procedure to include plan of safe care for infant born and identified as being affected by FASD. Policy and procedures have been developed along with a form for the plan of safe care for infants who have been identified as being affected by an FASD under the new CAPTA reporting law.

4) Provide training to DCFS staff on FASD and new policy/procedures. Trainings have begun and have taken place in 4 of the 10 counties on the new reporting laws and referral procedures.

In addition the FASD Task Force continues to meet monthly with leadership of community and state organizations that are committed to improving the lives of children and families who are living with an FASD.

Several Conference speaking opportunities this year for the program staff include: Arkansas Children's Hospital, Angel One Team FASD Presentation with Dr. Schaefer, Wilber D. Mills Co-Op HIPPY presentation, NWA PRC AHEC Training in Fayetteville, Saline County Foster Parent Conference, Pulaski Technical College FASD presentation, Foster Parent Conference Jonesboro, PRC Garland County Change Point FASD, Zero to Three Court Team for Safe Babies Medical Luncheon with Dr. Burd and Dr. Schaefer, Zero to the Three Cross Site – FASD Panel Discussion FASD program in Arkansas, PRC NE Arkansas Walnut Ridge FASD, FASD at the Underage Drinking Conference, FASD presentation at the AHSEA conference.

The FASD program director and a FASD task force member, who worked on the project as a part of the evaluation team, submitted an abstract for an oral or poster presentation to the First International Conference on Prevention of FASD to be held in Alberta Canada in September of 2013. The abstract was accepted as an oral presentation and is titled Screening, Diagnosis and Intervention in the Child Welfare System. Both the FASD program director and the a member of the FASD task force who was active on the evaluation team for the FASD project will attend the conference and give the oral presentation.

The FASD Task Force supported the efforts of one of its members the March of Dimes, who lobbied for the Warning Sign Bill House Bill 2277 which Passed and is now law in Arkansas.

Goal: Develop and implement a Differential Response Program (DRS) in Arkansas.

1) Identify specific DRS allegation types. **(**Completed)
2) Establish a workgroup to assist in development and review of program. (Completed)
3) Develop functional job descriptions for staff working with DCFS DRS. (Completed)
4) Outline roles/responsibilities for hotline and providers of DRS. (Completed)
5) Develop Request for Proposal (RFP) for potential DRS providers. (Completed)
6) Coordinate technical assistance with Casey Family Programs. (Completed)
7) Develop DRS policy and procedures. (Completed)

8) Develop initial and ongoing DRS training. (Completed)
9) Develop an oversight process to evaluate DRS implementation and sustainability of DRS program. DCFS is reinstating the steering committee and assessing to determine if we have the right members that helped shape the DR program. We plan on inviting some of the old members as well as add new ones. Hornby Zeller and Associates are currently conducting a study on the first six months of DR to determine how effective the implementation of the program is, whether staff are referring based on the identified need and to appropriate services, and recidivism of referrals. *(HZA methodology can be accessed on site)*

Goal: Address McKinney-Vento Homeless Act in DCFS practice.

1) Review DCFS policy to assure it reflects McKinney-Vento Homeless Assistance Act and revise as necessary.
2) Create a Question and Answer format to address specific questions from DCFS staff about McKinney-Vento.
3) Develop practice guide for field staff on how to best serve the homeless youth population.

There was no progress made on this specific goal. DCFS will focus on this goal in the upcoming year.

If at any time Arkansas changes policies, procedures, or statutes that impact CAPTA requirements, the Children's Bureau will be notified and the State will make any corresponding changes to the APSR.

Juvenile Justice from APSR

Provides the number of children under the care of the State child protection system who are transferred into the custody of the State juvenile justice system:

- 66 distinct foster children placed in Division of Youth Services (DYS).
- 13 distinct foster children exited foster care for 'Custody Transfer to Another Agency defined as: The State of Arkansas released custody of the children to the custody of CPS in another state.

DCFS has children that are in Foster Care that at times are adjudicated and enter the Juvenile Justice System which we reference as Division of Youth Services (DYS). Although they are considered in the custody of DYS at the time of this transfer, DCFS continues involvement in lieu of a parent. DCFS has a Memorandum of Understanding with DYS so that we can ensure smooth transfer of custody upon entering and discharging from the DYS system. The discharge process could mean a transfer back to DCFS custody and authority, reunification with parent/relative, or the youth ages out on their own. Our goal would be in the aging out circumstance that they would have a support system established upon discharge. DCFS has an identified liaison that works closely with DYS on youth and the custody.

Specific Activities related to Services & Training utilizing CAPTA & Prevention Support Funding

- Contracted Language Interpreter services provided statewide for county staff with families who are not proficient in English. Interpretation and telephone services were provided 24

hours a day, seven days a week. This service assists staff in the translation of documents and provides an avenue by which family service workers are able to communicate with Non-English speaking families. DHS legal department use the language interpreter contract for appeals hearings in maltreatment cases. Translation of documents continue to be used by the policy and legal department. There are no planned changes to this service.

- Contractual agreements with the Family Treatment Program provided opportunities for parents and caregivers of sexually abused children to receive treatment services. Participants receive an assessment, a diagnostic interview, a psychiatric review and individual and or group psychotherapy. Services were offered state wide and there are no planned changes to this program.
- Intensive Family Services (IFS) was modified to become more prevention focused. Providers and caseworkers continue to assist families in identifying their own needs. This is based on the responses of the family satisfaction surveys. People can and do change. When families are engaged in the identifying their supports and needs staff can expect change and improvement.

Several changes have been made to IFS and Counseling to ensure that the services are more family focused and friendly. DCFS clients receiving services from contract vendors are provided opportunities to fill out a satisfaction survey regarding the service. Based on the results of the client satisfaction surveys, clients were satisfied with the service. One stated that the in home session worked well for them due to the family not having transportation. Another family stated that they were really satisfied with the one on one services and that the service was helpful. Another family stated that they would recommend the service to other families.

Clients continue to receive Intensive Family Services. The North Carolina Family Assessment Scale (NCFAS) is completed on families at the opening and closing of Intensive Family Services (IFS) to identify their level of family functioning. IFS providers choose from six measurement levels/options to describe whether the family has an existing strength or problem. DCFS researched appropriateness of referrals for IFS using the results from the NCFAS and found that there was a 5% decline in the total percentage of families at or above the adequate/baseline level of functioning at the intake of IFS. This decline implies that more appropriate referrals for IFS are being made by DCFS staff, courts and other referring entities.

According to National Family Preservation, “Adequate/Baseline” is the family functioning level where families have no reason for intervention. Therefore, seeing a decline in families with an Adequate or above functioning level at the start of IFS is a positive as it reflects a more appropriate referral for the family.

Family functioning levels Adequate or Above Adequate at Intake for SFY 2011 was 44%.

Family functioning levels Adequate or Above Adequate at Intake for SFY 2012 was 39% (5% decrease).

IFS is intended as a referral for families with functionality concerns, it is desired to see more families at the intake of IFS with a moderate or severe problem. DCFS staff will need to conduct research to identify causes for the low percentage of families that are being referred for IFS with severe or moderate problems.

Psychological Evaluation Services scope of work and performance indicators have been revised to be more individualized, family friendly, and family focused.

- DCFS maintains an agreement with the Arkansas Chapter of Pediatrics for the availability of a physician to assist in responding to "Baby Doe" reports. The Division has a policy that outlines procedures to be taken in the event a "Baby Doe" report is received. DCFS did not receive any "Baby Doe" reports during this reporting period. "Baby Doe" services are provided statewide.

During the past year, the activities for CAPTA are listed below:

- DCFS Program Assistants were trained and certified through Mid-South in Parenting Education.
- The agency distributed child abuse materials and promotional items including telephone magnets, two sided book markers, brochures, etc. in an effort to educate the community. Throughout the year, DCFs receives request for child abuse materials from the Arkansas State Police, Field Staff, community agencies, schools and medical facilities. County offices held community awareness events in collaboration with members of the community.
- A prevention website is being used throughout the year to target the reduction and awareness of child abuse and neglect. The prevention website is www.arstopchildabuse.org . There have been a number of reported cases about children being abused by the parent's significant other. An information sheet was developed on the subject and uploaded to the website. The brochure will also be distributed to single mother organizations as well as other community groups advising them to use caution when selecting a babysitter.
- Based on information in CHRIS and media outlets, a number of children are being abused and some have died due to mothers leaving their children alone with their significant other or untrained babysitters. DCFS felt the need to inform the public to use caution when selecting someone to babysit. An information pamphlet was developed on the subject. This pamphlet will be distributed to local high schools and organizations that provide service to mothers.
- Each year DCFS conducts a statewide campaign on child abuse prevention awareness. There was a statewide rally held at the capitol on April 23, 2013. The DCFS director spoke as well as a former client. Attendees of the event were given pinwheels and posters. In attendance were community stakeholders, law enforcement, DCFS staff, and family members that were once involved with the child welfare system. The local county offices also held information booths, picnics and passed out information regarding the prevention of child abuse.
- DCFS has a contract with the Child Abuse Commission to conduct training on indicators of abuse and mandated reporting. Training was also conducted on ACT 1236 regarding child abuse. This training was provided to childcare staff, head start personnel, school personnel, Game and Fish officers, Administrative Office of the Courts conference attendees and domestic relations ad litems. A total of 1,319 people were trained by the Child Abuse Commission.
- This will be the first year for DCFS to sponsor a reunification celebration. The event will be held June 17, 2013 at the Museum of Discovery. The Museum has stated that they would like to collaborate with us by contacting and inviting their community partners.

They will also list the event on their face book page. A couple of children will be asked to speak about the importance of being reunited with family as well as a relative speaking about stepping up and caring for children.

Outline of Activities for FY 2014

- DCFS will maintain a prevention website for FY 2013. A new brochure was added to the prevention website this fiscal year. DCFS discovered that several maltreatments to children were committed by babysitters. The agency wanted to bring awareness and the importance of using caution when selecting someone to babysit. The brochure is entitled "Do You Really Know Your Babysitter." Prevention unit will continue to research topics and upload to the website those that might be of interest to the public and assist in bringing about awareness regarding the prevention of child maltreatment.
- DCFS will purchase promotional items and prevention materials to target the reduction of child abuse and community awareness on the importance of prevention. These materials will also continue to be distributed to DCFS staff and community stakeholders to raise the community's knowledge of the need to protect children.
- DCFS Program Assistants will be trained and certified through Mid-South in Parenting Education.
- Additional parenting training resources will be made available to field staff for guidance in providing services to families.

There were changes to the Citizens Review Panels during the last state fiscal year.

CAPTA funded **2** Citizens Review Panels operating in Carroll and Ouachita Counties. The panels are active and work diligently to evaluate child protective services. The Citizens Review Panel Coordinators serve as Multi-disciplinary (MDT) Coordinators. MDT's are located in counties in which the Citizen Review Panels are located. The Panels play a very important role in the success of this initiative. Some of the responsibilities of the Panel include: convening meetings of the MDT; ensuring agreements of confidentiality are signed by members; coordinating information on all Hotline calls that meet the protocol for review by the MDT; reviewing information on pending child maltreatment investigations; making recommendations for services on each investigation reviewed at the MDT meeting and submitting to DCFS within seven days of the MDT meeting.

CAPTA requires child welfare agencies to have three Citizen Review Panels. However in March of 2012 one of the panels in AR terminated their contract with us due to family and health issues. As a result AR has taken a very in depth look at the citizen review panels currently in place, compliance with federal requirements and use of the panels in DCFS planning.
Three major areas were reviewed – Contract, Contractor Performance and Administrations use of Citizen Review panels monthly and annual reporting data.
Contract areas reviewed included:

- Contract scope of work
- Reporting expectations of provider
- Program deliverables

Contract area review indicated compliance with federal requirements and solid expectations of the panels.
Contractor performance review included:

- Membership of panel to ensure community involvement
- Number of meetings
- Number and types of cases reviewed
- Strengths noted
- Concerns of panel
- Recommendations of changes to improve system
- Actions taken to improve system
- Action Plan/Recommendation for following year (annual report)

Through this review it was evident that there was not a consistency in the quality of reporting nor in the number of cases reviewed from the two panels. Even though concerns were noted they were not always detailed enough for administration to be able to address or fully understand the concerns. Further review and interviews with staff indicated that information being submitted by panels was not being shared with any level within the organization therefore being very ineffective in driving change.
Based on the review the following are the recommendations and action steps to be taken by AR DCFS.

- Meeting will be held with the current two panels to discuss concerns with reporting, vagueness of recommendations, vagueness of what actions had been taken and the effectiveness of those actions to bring about change, etc. – thorough review of reports with panels.
    - Meeting to be held within 45 days
- DCFS Prevention Support manager will contact director of Family Resource Center located in the delta part of AR about the development of a panel in this area of the state. Review of current panels show a need for panel representation in the delta area which has a higher poverty rate, higher crime and violence and limited resources.
    - Call to be made within 7 days
        - Should Family Resource Center agree, agency will put in place a purchase order so panel activities can be started no later than October 31. This will allow panel to meet with Program Manager to go over expectations, etc.
        - Should they decline the agency will seek panels in either Pulaski County or in Craighead County
            - Additional panel to be in place no later than December 31
- Monthly reports from panels will be sent to Agency Director who will share with DCFS executive staff and other appropriate staff based on contents in reports.
- Reports will be reviewed, discussed and actions steps identified in executive staff meetings.
- Comparison of reports from panels and internal CFS Child Protective Services will be conducted.
- Reports will be shared with DCFS Advocacy Council on a quarterly and annual basis along with agency action steps.

- Monthly and annual report data will be reviewed in the agency's strategic planning meeting to ensure agency is addressing short and long term recommendations of the panel.
- Monthly and annual reports along with actions plans developed will be included in agency's Annual Progress and Statistical report.

It is the expectation of the agency Director that the information reported by the panels will be used to improve practice and improve outcomes for the children and families served.

Program Areas Selected for Improvement for FY 2014

- Parenting – Prevention Unit Staff facilitated an IV-E Waiver workgroup to research a parenting curriculum that would address the needs of families involved in the child welfare system. The work group reviewed numerous evidenced based curriculums and determined that the Nurturing Parent Curriculum would be best suited for the Arkansas Division of Children and Family Services.
- DCFS staffs in the field have provided feedback that the current parenting curriculum was not addressing the needs of DCFS parents. Based on staff's complaint, research was feedback conducted in identifying an evidence-based curriculum that would meet the needs of families involved in the child welfare system. Because of the stated need, a workgroup that consisted of collaboration between a judge, community stakeholders, DCFS staff, a sister agency and a youth researched evidenced based parenting curriculums and found that the Nurturing Parent curriculum addressed the needs of families involved in the child welfare system. The recommendation was submitted to the IVE Waiver Committee. After discussion and review, the committee accepted the recommendation. The lead facilitator of the workgroup was charged with drafting the performance indicators and scope of work for parenting. The information was to be completed according to timeline by April 30, 2013. The scope of work and performance indicator was completed and submitted to the IVE Waiver Committee for review and approval. The committee had stated that they wanted to RFP for this service in July 2013.

There were no substantive changes in state law that impacted the State's eligibility for the CAPTA State grant.

Update on Implementation of Differential Response:

The Arkansas Division of Children and Family Services (DCFS) decided to design a Differential Response system to allow the Division to respond to low risk neglect cases by conducting an assessment instead of a traditional investigation. During the spring 2011 General Legislative Session, Arkansas statute was amended to give DCFS the ability to triage procedures for accepting and documenting reports of child maltreatment of a child not at risk of imminent harm if an appropriate referral is made to a community organization or voluntary preventive service.

To gain a better understanding of the Differential Response process, Arkansas DCFS staff conducted exploratory research to obtain information about existing alternative response systems. During the month of April, 2012, a DR steering committee made up of state and private partners was convened to develop a structure which would support the development,

implementation and evaluation of the a differential response model for the state of Arkansas. The steering committee met several times to establish the criteria for differential response, rules of operation, the procedures and mandatory exclusions. The DCFS DR program was designed to make direct referrals to community providers. In an effort to solicit contractual providers, DCFS issued a Request for Services Proposal. There were no viable providers. The decision was made to review and update the DR policy and procedures to implement utilizing internal staff.

In an effort to obtain more information related to DR, DCFS staff collaborated with Casey Family Programs. Casey family programs provided technical assistance to assist with designing and researching Differential Response models. With Casey Family Program's assistance and guidance, three business process mapping sessions were conducted in Little Rock, Arkansas. The sessions consisted of key DCFS employees working to create the process for designing and implementing DR. At the conclusion of the sessions, DCFS staff was given mapping guides to be used when implementing the DR initiative. DCFS staff was selected to participate in a Shared Learning Collaborative hosted by Casey Family Programs. The meeting consisted of four states that were in the early stages of designing a DR program, coming together to discuss their goals and objectives for DR model in their states. The Shared Learning Collaborative took place on November 15-18, 2011, in Las Vegas, Nevada. This collaborative meeting allowed DCFS an opportunity to receive guidance from peer experts from Minnesota, Ohio and Tennessee.

In addition, DCFS staff created a job description for the DCFS DR Program coordinator. A program coordinator was hired to oversee the implementation of the DCFS model, May 2012.

The steering committee has faced several challenges regarding the implementation of a DR process. The greatest challenge was locating a funding source. Due to the budget restraints states are experiencing, DCFS decided to conduct training for DR staff in September 2012 and those 5 counties began working DR on 10/1/12. On November 19, 2012 an additional 5 counties began DR with the staff that were trained in September. Subsequent trainings have been held in Benton, Sebastian, Craighead, and Jefferson Counties and 38 counties have operating DR teams. Differential Response will be statewide by August 15, 2013. The process will be cost neutral and will allow DCFS the ability to shift the way the work is done, and ensure the focus of DR is to safely maintain children in their own home while engaging and strengthening families. The supervisors and staff have participated in conference calls as well as meetings to discuss policy changes and program effectiveness. A statewide quarterly DR meeting will take place starting in the fall. The staff will learn more about family engagement and it will allow them to have an opportunity to network and discuss the program.

To enhance the quality and effectiveness of the DR Team the CHRIS system underwent programming changes so that all contacts and referrals can be documented within the computer system. There have been two CHRIS enhancements since the release of the DR program and continuous improvement and changes are ongoing as the program develops. CHRIS net reports have also been created to help monitor the program and collect data. The development of CHRIS net reports is an ongoing process as monitoring tools are identified.

DCFS is reinstating the steering committee and assessing to determine if we have the right members that helped shape the DR program. We plan on inviting some of the old members as well as add new ones. Hornby Zeller and Associates (HZA) are currently conducting a study on the first six months of DR to determine how effective the implementation of the program is and whether staff are referring to needed and appropriate services. This study will also look at the

recidivism of referrals and determine if any of the children entered foster care after having had a DR case. HZA developed a methodology to guide the study.

Casey Family Programs provided lunches to support the staff during the training process. Casey also allowed 3 staff including the DR Coordinator to attend the National DR Conference in Las Vegas in November 2012. The conference allowed the staff to attend seminars on how other states conduct their DR programs including statistical data. They are also providing technical assistance to help teach and determine if the DR Teams are engaging the families.

Next steps: In order for DR to become a statewide program three additional trainings have been scheduled across the state. These trainings will also serve the counties that need additional workers trained due to the volume of referrals and new staff they have acquired. Casey Family Programs is facilitating a peer shadowing trip for 3 staff including the coordinator to help gain a working knowledge of another state's program. A quarterly DR training is in the planning stages and the first meeting should take place in early fall.

Foster Care Services:

Foster Care Services are represented by several programs and units in DCFS which include: Permanency Specialist who coordinate Permanency Round Tables and coordinates the Subsidized Guardianship Program; Transitional Services Unit which coordinates events and best practices for working with youth; Specialized Placement Unit whom coordinates the Interdivisional staffing and locates and assures specialized placement for youth with special needs as well as the keying and monitoring of contract TFC placements and DDS placement; foster care unit staff who manage the board payments, out of state birth certificates processing, keying and monitoring of safety check for private providers; the eligibility unit; policy unit who assures we have policy and procedures as well as assisting with best practice guides; the adoption unit; and many others. All of these units are critical to the success of the foster care program in DCFS. This last year, DCFS Director developed a Permanency Team which consists of any of the unit managers mentioned above as well as the Community Services Assistant Director and focuses in on data, what the data is telling us, follow up with field, and analysis of the data again to then determine what action steps that we can take to improve the quality of services and the permanency outcomes of children in foster care.

DCFS is fully aware of the complexities that face all child welfare agencies. That is ensuring the safety, permanency, and well-being for vulnerable children and families across the State. One of the most challenging tasks is working with birth families whose children have been removed from the home. Birth families that have children in the foster care system deal with multiple stressors; they not only struggle with the issues that precipitated the loss of their child, but also with the trauma of the loss itself. They also struggle with multiple challenges that include: poverty, single parenthood, domestic violence, substance abuse and mental/physical abuse. The agency understands that birth parents can be defensive about sharing about themselves and their children. As a result, they are sometimes reluctant to respond to caseworkers and to services being offered.

Currently, the agency is reviewing best practice on how to engage birth families. Some research suggests relational approach is best practiced when centered on child/parent visitation. Training will be developed on giving workers the tools needed to engage birth families in the development of the case plan to meet both the parent and child needs as well as accepting the

services provided by the agency. The agency continues in the belief that engaging birth families directly relate to outcomes for children. In this past year, little progress is noted. DCFS strongly urges case workers to work with birth families to achieve positive outcomes. The agency will continue working to take the necessary steps to infuse engagement of birth families into best practice. The agency will gather information from birth families to use in trainings developed for field staff.

Recruiting and retaining quality foster homes continues to be a top priority for DCFS. The agency continues to seek input from foster parents and other foster care providers on how we can improve in meeting their needs.

Foster Parent Recruitment and Retention Plans

The Division conducts monthly Resource Worker meeting where we have the opportunity to provide updates, discuss best practices, strategies to increase the number and quality of homes, clarify policies, and build team work.

During this last year, some of the ideas and strategies utilized consistently for increasing and improving foster homes were:

- Improved screening of applicants. Foster Parents may need to be screened out during recruitment because of their unrealistic preferences. Many won't take teenagers.
- Worked on strengthening communication. Communication is key to have good relationships with foster parents.
- Likewise, building good relationship between staff and foster parents is also key to increasing the retention statistics. Ideas include calling to check on the family during times that you don't need them.
- Explored developing more tools on how to deal with babies who were affected by drugs while in utero. Families requesting babies need to know that many of the babies have illnesses that they will have to manage; even if they are not a therapeutic home.
- Strengthened assessment of motivation. Be aware of families who really want to adopt but agree to foster in the meantime. They often become attached and this makes it hard for the bio-family to make progress.

DCFS recognizes that supporting foster parents to increase retention has significant impact on the recruitment of new homes. DCFS continually works with staff in regards to their role in recruiting and supporting foster parents. In addition to the support provided by staff including Resource Workers who monitor the foster homes, DCFS provides the following resources to foster parents:

- After-Hours Medical Resource Line – a telephone number that foster parents may call if they have questions related to the medical needs of the children (through a partnership with the Division of Medical Services, Arkansas Children's Hospital and the University of Arkansas for Medical Sciences).
- Volunteer State Foster/Adoptive Parent Liaison – provides resources and assistance to resource families in Arkansas, including suggestions for navigating through the system, information and resources for educational issues, active listening for compliments or complaints.

- Foster Parent Groups and Associations – provides a medium through which foster parents may connect with other resource families in their local communities.
- Annual Foster Parent Conferences held at the local level to provide the opportunity for foster parents to receive required training and network with other foster parents.

The foster care unit as well as the specialized placement unit provides services and supports to foster parents. These services and supports include but are not limited to:

- Technical assistance in resolving board payments for foster and adoptive families
- Technical assistance in resolving issues with out of state birth certificates needed for adoptive families
- Responding and routing calls from foster parents to appropriate staff to address the concerns or issues that they have
- Periodic mail outs to foster parents in regards to policy updates and events
- Technical assistance and case consultations on specific behaviors problems and/or prescription medication issues
- Follow up assistance and guidance with educational issues
- Developing and coordinating opportunities for specialized training at the local level
- Website with information and resources listed

Supports in development for the 2013/2014 Year:

- Welcome Letter to all foster families that open each month that will include other resources such as: contact list with numbers for central office staff, relative handbook, Afterhours Medical Resource line protocol, among other resources
- Travel Reimbursement Guide

DCFS was awarded the title IV-E waiver this last year. DCFS has identified targeted recruitment (performance based contracting) as one of the interventions to address through the waiver. In the planning and development phase, DCFS has been analyzing data and establishing workgroups to involve foster parents, staff, and other stakeholders to begin to focus more intently on the need to recruit and retain foster families that can meet the specialized needs of children in foster care and provide temporary care while their families address the issues that brought them to the divisions attention.

The foster care recruitment plan includes strategies for local and central office staff. This primarily focuses on general recruitment. Arkansas recently was approved for waiver and intervention is targeted recruitment. Once that plan is approved, we will include as part of our APSR recruitment plan.

Foster Care Recruitment and Retention Plan

Our recruitment/retention plan is a reflection of a team approach to recruiting and retaining quality resource families to provide care to our children in foster care and supporting those homes currently available to accept our children.

Timelines associated with these goals will change as information is reviewed.

Goal: Recruit foster families in sufficient numbers to meet the needs of children in foster care.			
Objective 1		**Status**	**Comments**
Increase awareness and education of DCFS and DHS staff concerning foster care needs.	**1. Utilize reports matching preferences of foster parents to demographics of children.**	**The permanency team has reviewed and analyzed data reports to determine the characteristics of children in foster care and the characteristics of children accepted by families AR needs to recruit. AR also is piloting a Foster Care matching system.**	
	2. Through meetings with resource workers determine specific /targeted needs such as medically fragile, teenagers, large sibling groups, etc.	**Monthly Resource Worker meetings are conducted. We have assessed the recruitment material this past year and gathered the type of recruitment activities that are currently taking place to assess and determine what is needed in regards to strategies over the FFY 2014 year.**	
	3. Develop necessary recruitment materials to meet the specific needs as defined in steps 1 and 2	**Development of recruitment material is pending. We do have general recruitment material and partner with Adoption recruitment in regards to "A Place to Call Home" for special needs.**	
	4. Work with local staff and stakeholders to determine best location for recruitment efforts **a. Venues** **b. Forums** **c. Audience to target for best results**	**The resource workers continually do this at the local level.**	

	5. Work with Communications Specialist to develop appropriate messaging for the individual counties needs	**AR did have some opportunity this year to have local media interview active foster parents during Foster Care Month.**	
	6. Determine best location for the most effective use of recruitment informational brochures and recruitment of foster homes	**Recruitment material is utilized in many different forums and many different events. During Foster Care Month we placed ribbons on the River Bridge and had material available during River Fest.**	
	7. Review where inquiry meeting notices are being posted	**Pending. Currently posted on web site.**	
	8. Work with local staff on best locations for posting meetings and upcoming foster care events	**Pending.**	
	9. Review current locations for inquiry meetings to ensure they are in a location convenient and conducive to professional meetings	**Pending**	
	10. Establish a listing of locations to rotate inquiry meetings to garner more community awareness of foster care and the needs of the agency	**Pending. Strategy in development to have Inquiries managed from the Central Office with specific protocols for follow up and support.**	
	11. Review tracking log for barriers to timely opening/approving of foster homes **a. Training schedules** **b. Fingerprint checks** **c. Home studies** **d. Other barriers**	**This is a continual process that the Permanency Team and Executive Team have focused on. We made adjustments last year to streamline the process and have aligned the Criminal Record checks for foster and adoptive families during this legislative session.**	

	12. Promote relative placements	**Ongoing**	
	13. Conduct local community meetings to share information regarding foster care, statewide numbers, local demographic information, barriers, successes and needs of the agency and communities can help with these needs.	**Ongoing**	
Objective 2		**Status**	**Comments**
Enlist the support of DCFS Foster Parents to assist in recruitment efforts	**1. Communicate needs of the foster care system to local stakeholder groups**	**Ongoing**	
	2. Communicate needs of the foster care system to local foster parents	**Pending. AR is looking at developing a data report that can reflect the needs within school districts and neighborhoods where by partnering with UALR and the GIS program.**	
	3. Engage foster parents in local areas about how to generate more interest in fostering, mentoring, etc.	**Ongoing**	
	4. Invite foster parents to attend inquiry meetings to share their experiences and to answer questions from prospective/interested parties	**Ongoing**	
	5. Invite foster parents to attend foster/adopt pride training	**Ongoing. The work this last year has been to improve consistency with attendance.**	
	6. Engage foster parents regarding where the best opportunity for recruitment is in their	**Ongoing**	

	communities		
	7. Distribute foster recruitment brochures to foster parents for them to hand out	**Ongoing. The work here is to have consistency and available material in the local county offices.**	
	8. Communicate to current foster families their role in recruitment	**Ongoing**	
	9. Work with Division to sponsor community foster care awareness activities	**AR has had many events for awareness during Child Abuse and Neglect Prevention Month, Foster Care Month, Adoption Awareness Month, and for the first year has sponsored a Reunification Month Event.**	
	10. Encourage foster parents to invite interested individuals to inquiry meetings	**Pending.**	
	11. In areas without foster parent associations, work to develop	**Ongoing.**	
	12. With current active foster parent associations encourage their participation in recruitment	**Ongoing**	
	13. Recruitment of volunteer foster parent to serve in role as statewide volunteer liaison **a. Develop job descriptions** **b. Outline parameters with in which they work** **c. Role of the position**	**Currently have a Volunteers Statewide Foster Parent Liaison and have completed these activities.**	

	d. Develop procedures and guideline for position to follow when handling calls **e. Development of messaging to foster parents and staff regarding the function of this role** **i. When to call, what to forward to this position, etc.** **f. Development of information to reported monthly** **g. Development of how information will be shared and used to guide systemic change**		
	h. Explore the development and role of statewide foster care advisory board		
Objective 3		**Status**	**Comments**
Increase awareness and education of the community concerning foster care needs.	**1. Activities under Objective 1 and 2 will address these issues as well**		
	2. Encourage local community awareness campaigns **a. Booths at local functions** **b. Presence of foster care workers and foster parents at local events** **c. Church and school functions** **d. Articles in local newspapers of successes** **e. Article in local newspapers of needs** **i. Christmas time** **ii. Beginning of school year** **f. Development of local PSA's** **g. Being involved in local speaking engagements**	**Ongoing. See Resource Worker updates.**	
	3. Partnering with local community groups/organizations who are interested in helping out the organization (ex. Beki's Kids project)	**Ongoing**	

	4. Utilizing a Place to Call Home TV segment which promotes foster home recruitment when they introduce the segments featuring our children.	**Ongoing**	
	5. Keeping foster parent website updated as Channel 11 has added a foster care banner on their website which provides a direct link to foster care information	**Ongoing**	
Objective 4		**Status**	**Comments**
Support area and county recruitment plans and efforts	**1. Ensure community has local contact information to access information regarding foster parenting, locations and times of inquiry meetings, etc.**	**Ongoing. DCFS provide recruitment material during the monthly Resource Worker meetings or upon request.**	
	2. Encourage county supervisors and area directors to attend local inquiry meetings occasionally to show support	**Ongoing**	
	3. County staff participate in local recruitment activities	**Ongoing**	
	4. As part of routine staff meetings, discuss foster home needs, recruitment of specialized homes,	**Ongoing**	
	5. Encourage timely responsiveness of all staff to foster parents calls and needs	**Ongoing**	
	6. Ensure foster parents are given contact information of local staff	**This is provided during the opening of foster home.**	
	7. Share in staff meetings issues staff may have heard in the community regarding foster care and if appropriate develop messaging to counter act any negative comments and share with staff any positive comments received in the community	**Ongoing. shared in monthly reports or case by case with AD of Community Services.**	

Objective 5		Status	Comments
Support of current foster parents	**1. Addition of foster parent liaison position will provide avenue and voice for foster parents**	**Ongoing**	
	2. Send annual surveys to foster parents to obtain feedback **a. Practice** **b. Needs** **c. Suggestions for improvement**	**We have utilized the Foster Home study HZA conducted recommendations over the last two years and will not conduct a survey until July 2014. We are revising the closure survey and will implement that survey around January 2014.**	
	3. Promoting local foster parent conferences	**Each Area has an annual foster parent conference**	
	4. Promoting statewide foster parent conference	**DCFS did not have a state level conference. There are plans to have some type of state level event for foster parents in SFY 2014.**	
	5. Recognition of foster parents – Foster Parent of the Year awards and local recognition for their support and help in events, etc.	**These are usually during the Local foster parent conferences.**	
	6. Encourage timely responsiveness of all staff to foster parents calls and needs	**Ongoing**	

	7. Ensure foster parents are given contact information of local staff	**Ongoing**	
	8. Develop most effective method to communicate information to foster parents	**Ongoing**	
	9. Ensure foster parents have the most current information regarding DCFS policies and procedures	**Available on line and DCFS completed mail outs with any new information involving foster parents.**	
	10. Using information collected when calling foster parents who have elected to close their home **a. Practice issues** **b. Experience** **c. Needed supports** **d. Why they elected to close** **e. How we could have made their experience better** **f. Improvements needed in the system** **g. Things working in the system**	**Pending/In Revision**	
Objective 6		**Status**	**Comments**
Coordinate with Adoption recruitment activities	**1. Invite Adoption specialists to inquiry meeting**	**Ongoing**	
	2. Promote working as a team on foster/adoptive recruitment	**Ongoing**	
	3. Coordinate speaking events	**Ongoing**	
	4. Joint local community awareness campaigns	**Ongoing**	
	5. Encourage monthly staff meetings between foster and adoptive staff	**Ongoing**	

RECRUITMENT IDEAS, STRATEGIES, & TOOLS for 2012-2013

- Area 1 uses inquiry meetings and The CALL does the rest. They are short staffed so general recruitment is all they can do at this point which makes retention hard.
- Area 2 uses The CALL for most of their recruitment. They would like visual aides to use during information meetings (i.e. power point).
- Area 3 recruits the relatives of children already in care.
    - Area 3 uses presentations that target minority groups and religious groups.
    - We also need more information targeted towards fathers.
- Area 4 uses a free classified add through the 'American Classified' publication.
- Area 5 uses Facebook support groups for retention and The CALL for recruiting.
- Area 6 has recruitment events such as health fairs/community days or balloon releases.
    - They have also partnered with Comcast for advertisements and have put flyers on the library doors.
- Area 7 is utilizing the CALL for most recruitment activities.
- Area 8 is using The CALL for most recruitment activities.
- Area 9 uses inquiries and classified ads.
    - They have posters up at different places including booths at church events.
    - They have foster parents to speak at different events.
- Area 10 uses posters up at different places including community events and faith based events.

During SFY 2013 3,972 children entered foster care**.** However the Division does not have an adequate number of appropriate and available foster homes to meet the needs of our foster children on a continual basis. Currently the Division has 1,150 homes available.

DCFS utilizes a variety of different ways of data collection to reflect the characteristics of children who enter care. Below are a couple of charts that provide examples. These are reflected in our Annual Report Card. (Link provided in the Services under 5 sections.)

Below reflects data based on children entering care:

Ages of All Children who Entered Foster Care During SFY 2013

Age Range	Count	Percentage (%)
0 to 1 Years	984	24.8
2 to 5 Years	1,057	26.6
6 to 9 Years	793	20.0
10 to 13 Years	556	14.0
14 Years and Older	582	14.7
Total	***3,972***	***100.0***

Gender of All Children who Entered Foster Care During SFY 2013

Gender	Count	Percentage (%)
Female	1,951	49.1
Male	2,021	50.9
Total	***3,972***	***100.0***

Race/Ethnicity of All Children who Entered Foster Care During SFY 2013

Race/Ethnicity	Count	Percentage (%)
WHITE	2,647	66.6
BLACK	651	16.4
MULTIPLE	377	9.5
HISPANIC	263	6.6
NAPI	10	0.3
AIAN	9	0.2
ASIAN	1	0.0
UTD	14	0.4
Total	***3,972***	***100.0***

Removal Reasons for All Children who Entered Foster Care During SFY 2013

Removal Reason(s)	Count	Percentage (%) of Removals in which Reason was Cited
Neglect	2,028	51.1
Parental Substance Abuse	1,846	46.5
Incarceration of Parent(s)	783	19.7
Physical Abuse	511	12.9
Inadequate Housing	323	8.1
Child's Behavior	256	6.4
Caretaker Illness	223	5.6
Sexual Abuse	152	3.8
Abandonment	121	3.0
Other	32	0.8
Total Removal Reasons	6,275	N/A
Total Removals	***3,972***	***100.0***

Permanency Roundtables

Over the past three years, the Arkansas Division of Children and Family Services has worked toward positive transformation of the state's children welfare system. A key piece in our transformation efforts involves recognizing and communicating that every person within our system is a leader through his own daily demonstration of effective practices. We reinforce this message in our Practice Model values that "*how* we do the work is as important as the work we do." We are drawing from a complex evidence base to assist us in our transformation. We are presented with both urgency and opportunity to design a child welfare system that includes:

- a comprehensive practice model to guide the work of the field and central office support;
- change management strategies;
- a strategic communications plan;
- continued professional development;
- a service array with attention to variety, efficiency, and effectiveness of procured
- services as well as services and support organized through community partnerships; efforts to enhance quality assurance including development of a system for results monitoring and practice improvement at all levels to ensure the safety, permanency, and well-being of families.

Arkansas's partnership with Casey Family Programs provides us with one another opportunity for transformation in the strategy of Permanency Roundtables. The values of this model align with the goals and principles of Arkansas Practice Model.

Permanency Roundtables are structured professional case consultations designed to expedite permanency for youth in care through innovative thinking, applications of best practices, and the "busting" of systemic barriers. At each Permanency Roundtable, a permanency status assessment determines where the youth rates on a permanency scale. The rating options are: poor, uncertain, fair, good, very good, or achieved.

The desired results all link to expediting permanency and include:

- increasing staff competencies (attitude, knowledge, skills);
- assessing training needs related to competencies related to expediting permanency; strengthening local capacity to sustain the process; building capacity to spread the process geographically; gathering data to address systemic and cross systems barriers to permanency (policies/protocols/procedures).

In February 2010, Arkansas targeted youth in care 24 months or longer regardless of the age, goal, and ethnicity. At the time we chose to implement Permanency Roundtables, there were approximately 4,000 youth in care with about one third of those youth having been in care 24 months or longer. As we began to identify youth who were appropriate for a round table, we began to also identify those youth that were in pre-adoptive placements. While these youth were already moving toward permanency, efforts to finalize the adoptions had stalled, so the urgency that the round table process provides was needed to finally achieve full permanency. Arkansas's Permanency Roundtables were completed in May 2011. There were a total of 363 roundtables conducted across the state. The Division of Children and Family Services has continued to implement sustainability practices of the Permanency Roundtables in our system. The Permanency Specialist coordinates our efforts by using the Arkansas practice model as the foundation for developing permanency strategies and activities that could potentially expedite

the permanency process for children lingering in extended foster care. The Permanency Roundtable coordinators across the state continue to submit aggregated data along with summary reports on the cases quarterly.

Arkansas's continued partnership with Casey Family Programs provides us with the technical assistance and in service training opportunities needed to sustain this strategic effort in our system. A statewide protocol and a CFS 340 referral form have been developed to submit new case referrals, along with technical assistance, training, and case consultations. We have a Memorandum of Understanding in place with Eun Koh a Researcher from University of Fayetteville, who is conducted our evaluation of the outcomes and effectiveness of the permanency roundtables. The evaluation did not provide any conclusive evidence on the effectiveness of the roundtables statewide since the current evaluation was based on Area 1 data only.

In March 2012, Casey Family Programs conducted a statewide Values Training to provide the state another learning opportunity to enhance our strategic efforts to improve permanency for children in foster care through the permanency roundtables. In 2013, the Permanency Roundtables are being included as a part of the IV-E Waiver plan. Arkansas will continue its partnership with Casey Family Programs through technical assistance and training to continue efforts to shift practice on how we explore, plan, and create permanency for children and families.

As of April 30, 2013, the statewide aggregated data results confirm out of 363 cases reviewed, 183 children remain in foster care. Of the 363 cases reviewed 12 children achieved legal permanence through reunification, 42 adoption, 18 guardianship, and 101 children were emancipated. About a little over 50% of our children achieved some form of permanency.

The first quarter results from April 2013 indicated about a 5% increase in the number of children who achieved some form of legal permanency. However, the majority of the legal permanency achieved has been through emancipation with a poor to marginal permanency status. In other words, some children have aged out of foster care without making any permanent connections. Despite the marginal successes with emancipation, the division has had some success stories with children reuniting with family and making permanent connections with new families through adoption. There have been strategic planning efforts to reintegrate and sustain the permanency roundtables in our state. The Permanency Specialist Coordinator has been conducting the Values and Orientation of the Permanency Roundtables across the state since February 2013. The statewide implementation of the roundtables is expected to be completed by October 2013. The Division is committed to expedite and achieve permanency for our children through the permanency roundtables efforts in order to transform our child welfare system in Arkansas

Health Care Services:

Health Care Oversight-Medical

The Division of Children and Family Services (DCFS) policy requires that all necessary medical services be provided to children receiving out-of-home placement services. DCFS is dedicated to ensuring that all foster children receive a full range of health care services, including mental health services. An initial health screen is completed on each child within 24 hours, if the reason for removal is an allegation of severe child maltreatment or evidence of serious injury/illness. All

other children receive the screening within 72 hours of removal from the home. All foster children age 3 and above are referred within 5 days for a mental health assessment with the local Community Mental Health Center. DCFS has an agreement with Community Mental Health Centers to provide an intake appointment within 5 days of the initial call by DCFS. Within sixty days (60) from the removal of the home, a comprehensive health assessment is completed on each child. DCFS ensures that all health and mental health services are provided periodically and conducted by qualified providers.

DCFS works with Primary Care Physicians, University of Arkansas Medical Sciences (UAMS) Project for Adolescent and Child Evaluations (PACE) Project and area mental health agencies in meeting the health and well-being of foster children. In addition, DCFS has increased the health staff around the state and re-established the quarterly training for Health Service Workers.

DCFS works with the medical profession, to ensure that all foster children's medical and mental health needs are met:

1) Collects sufficient history and medical data from appropriate sources to assess the child and formulate the problem.
2) Ensures that a mental health examination and physical examination is conducted as necessary.
3) Ensures that a diagnosis is establish
4) Initiates a treatment plan. Children are referred to the Child and Adolescence Service System Program (CASSP) or System of Care (SOC) for a wraparound plan, when they require intensive mental health services and inter-agency involvement on service plans. Compliance with the 24-hour & 72-hour health screenings and the comprehensive health screen has improved dramatically in several DCFS areas.

The Division utilizes the periodicity schedule for continued health care assessment and health planning for children in foster care. Each child has a primary care physician that will assess their health need and make referrals as needed to other specialties. Currently, licensing requires placement provider to log and track medication that children in foster care are taking and in response to Medicaid data that indicates increased utilization of psychotropic medication by foster children in addition to the general child population, a proposal has been developed that includes:

1) Implementation of a daily medication administration and monitoring form for all foster children that are prescribed psychotropic medications. In January 2013, a draft Psychotropic Medication Administration and Monitoring form was presented to the Therapeutic Foster Care providers. This form specifically monitored impact on target symptoms and side effects. After review and comparison with current medication documentation requirements by national accreditation organizations, such as JCAHO and CARF, problems emerged with the foster parents having to duplicate paperwork. DCFS is working with our TFC agencies and the Medicaid Chief Psychiatrist to revise the form, to meet standards from multiple oversight organizations without requiring duplication of efforts for our providers.
2) A guide for case workers and foster parents to assist them in asking pertinent questions regarding target symptoms, potential side effects and alternative approaches to address current problematic behavioral health issues. This guide has been distributed in meetings, foster parent newsletter and in response to individual case needs. In the next

year, DCFS will explore the best method for making this information available through a website.

3) Back up consultation by a child psychiatrist through the Arkansas Division of Behavioral Health Services (DBHS). In addition, in the past year, the Division of Medical Services (DMS) hired a Chief Psychiatrist, primarily working with the Medicaid pharmacy services. DCFS is working closely with DMS on psychotropic medications issues, both systemic and child-specific, when issues are identified in medication practices involving a foster child.

This consultation with DBHS and DMS continues to resulted in case specific intervention resulting in obtaining second opinions and decreasing or eliminating psychotropic medication in young children.

In 2009, a policy was implemented requiring assessment by the local community mental health center (CMHC) and consultation with central office administrator on-call prior to referring a child under age ten years to a psychiatric hospital. In 2011, the policy was revised to include all foster children, regardless of age. This practice had continued to result in significant number of diversion from institutionalize psychiatric care. SFY 2012 data indicates that 65.5% of all children assessed by the CMHC's were diverted from hospitalization. This number has dropped from 72% in SFY2011. This small drop in diversions may be associated with the fact that these numbers now include youth up through age 21, who are more likely to need a higher level of care. DCFS will work with the DHS quality assurance unit to determine if the data can be broken out by age to better track trends in service needs.

The division utilizes a medical passport process that maintains the child health record to ensure that foster parents and other placement providers are aware of the child medical history. The division is exploring the capacity to develop an electronic health record.

"After Hours Resources Line" DCFS has partnered with the Division of Medical Services (DMS/Medicaid), Arkansas Children's Hospital (ACH) and ANGELS/UAMS to provide an after hour's call line available for Foster Parent to contact and contact and ask questions related to the medical needs of the children placed in your home. This line is to be used only after hours AND in situations when the child does not have primary care providers (PCP), the PCP is unknown or family doctor assigned cannot after hours.

DCFS is currently reviewing the functional for DCFS Health staff to assure continuity of care for foster children.

Health Oversight-Behavioral Health

The DCFS Behavioral Health unit in Central Office includes prevention services, specialized placements, mental health utilization oversight, System of Care (SOC), and all other issues related to behavioral health concerns within the Child Welfare System.

The SOC Director for DCFS continues to provide child welfare expertise in many multi-agency initiatives and committees. Evaluation of the quality and level of involvement by DCFS in System of Care activities has resulted in the development of a draft SOC toolkit. Although this toolkit was completed, the SOC initiative housed in the Division of Behavioral Health Services (DBHS) had significant changes in staff and organizational structure which required a delay in the distribution of the toolkit. The SOC Director is also responsible for obtaining an analysis of outcomes data on specific services such as Intensive Family Services (IFS), special projects and

Inter-Divisional Staffings (case-specific outcomes, as well as identification of systemic issues to be addressed). An annual summary of interdivisional meetings was completed for fiscal year 2012. It is available on-site per request.

DCFS continues to receive weekly electronic reports from the Division of Medical Services (DMS) utilization management contractor. These reports identify foster children admitted to inpatient psychiatric facilities, for either acute or residential treatment. They also indicate if Medicaid has denied requests for continued stays at these facilities. These reports have resulted in increased monitoring and provision of technical assistance to the field regarding more appropriate discharge planning and placement. Based on these reports, in November, 2011, DCFS Behavioral Health Unit staff began sending weekly emails to all caseworkers who have a foster child in an acute or residential facility. This email requires information on the status of each child's plan for discharge placement, DCFS involvement in the treatment process, family involvement, visitation and what the youth is wanting upon discharge. If problems are noted, direction and support is given for field staff. It has been noted that this oversight has resulted in increased quality and quantity of involvement by the assigned case worker, as indicated by provider feedback and documentation in of best practices throughout the foster child's stay in inpatient programs. This oversight will continue with trends being noted in monthly reports.

Community-based Assessments Prior to Hospitalization

The Community Mental Health Centers (CMHC) agreed to provide assessments for any foster child in their community to determine if psychiatric hospitalization is necessary and to provide services to divert a hospitalization, if possible. This agreement just basically extends the previous agreement from foster children under age 10 to all children based on the revised mental health policy that became effective in November, 2011.

With increased involvement by the by the community mental health system, institutionalized care has been reduced with more appropriate evaluations and crisis stabilization services.

Foster Home Services by Community Mental Health Centers (CMHC)

In 2011, CMHCs were approached by DCFS to increase services to foster children placed in their catchment areas by assigning therapists to foster homes rather than assigning the next available therapist to a foster child referral. While all CMHCs agreed to attempt this approach, several have excelled in the project and have developed mental health services specific to the needs of the child welfare population. Saline County has a full time therapist assigned to each foster family and provides scheduled and crisis services in the home, at the office, school or any other place that best meets the need of the foster child and foster family. In northwest Arkansas, the CMHC developed an entire service unit for child welfare clients and foster families, in conjunction with their Therapeutic Foster Care program. Assessment services are available immediately and initial appointments are available within less than a week and sooner if the need is urgent. Other CMHC's are using this approach in some of the counties within their catchment areas but workforce issues are a constant issue in development of new services.

Oversight of Psychotropic Medication Utilization by Foster Children:

Representatives from the Divisions of Children and Family Services (DCFS), Behavioral Health (DBHS) and Medical Services (DMS) attended the Summit on Psychotropic Medication Use with Children in Foster Care, August 27-28, 2012 to obtain information from experts and other states on additional ways to improve the Arkansas plan for oversight and monitoring. The

Arkansas team included two staff members from each of the agencies invited; Medicaid, Mental Health and Child welfare.

Following the Summit, each of the Arkansas agencies agreed to form a steering committee to continue to develop monitoring plans, recommend policy changes as needed, and provide a forum for information and data sharing. The steering committee meets, at minimum, on a quarterly basis. Medicaid pharmacy reports are now produced and shared with DCFS and DBHS.

Beginning in January 2013, Medicaid began provision of reports containing the following data for the previous 3 month time period:

foster children on any psychotropic medication

foster children on antipsychotic medications

foster children on stimulant medications

foster children on 5 or more psychotropic medications

foster children on a combination of Clonidine and Guanfacine

This data will also reflect percentage of foster children on medications specified in each report, as compared the percentage of children on Medicaid who are not in foster care. Each report will be broken out by ages – under age 6, ages 7 to 13 and ages 13 to 18. This data will be reviewed quarterly and action plans initiated, as deemed necessary to improve the care of children in foster care. Report content will be revised according to findings and need to monitor other aspects of medication utilization.

Below is a table that summarized current practice within DCFS, strategies for improvement and target dates for each of the identified plan elements. The following plan was developed and submitted June 30, 2012 to the Administration for Children and Families, U.S. Department of Health and Human Services. Progress on plan elements and some target date changes are reflected under the "Target Date" column. Plan elements and target dates for implementation are flexible, and will be revised according to priorities set by the oversight committee that was established in September, 2012.

Plan Elements	Current Practice	Practice Improvement Strategies	Target Dates
Comprehensive and coordinated screening , assessment, and treatment planning mechanisms to identify children's mental health and trauma-treatment needs	Policy requires referral of all foster children ages 3 and above to the local CMHC within 5 days of entering care. If the intake assessment indicates need for continued treatment, the CMHC is required by Medicaid to have their psychiatrist evaluate that	Explore feasibility of including a specific trauma screening tool as part of the PACE Evaluation. Identify trauma screening tool.	July to Dec. 2012 **Completed** Dec, 2012 **Trauma**

(including a psychiatric evaluation, as necessary , to identify needs for psychotropic medication)	client within 45 days.	Plan to access TF-CBT certified therapists in state for those children identified through screen process.	**screening process within PACE implemented but work continues to implement evidenced-based tool**. November 2013 **This date has been backed up to the targeted date for implementation of the CANS functional assessment.**
Informed and shared decision-making and methods for on-going communication between the prescriber, the child, his/her caregivers, other healthcare providers, child welfare worker	Currently have guidelines for caseworkers/ foster parents, to assist in asking specific medication-related questions. General Medication Administration Log is required.	Implement specific form for Administration and Monitoring of Psychotropic Medications. The form has already been developed through collaboration with DBHS Medical Director and other Child Psychiatrists.	Pilot form in TFC programs, July – Dec. 2013 Implement in all foster homes and residential group placements in February, 2014
Effective medication monitoring at client and agency level	Foster parents or other caregivers along with FSW monitor for compliance and outcomes. Medicaid, DBHS and the UAMS Department of Pharmacy currently monitor psychotropic	Develop strategy to improve consent protocol for psychotropic medications, requiring specific staff training/ knowledge base for classes of medications prescribed.	March, 2014

	medication utilization. Flags have been set to screen out prescriptions for children that are outside specific, best-practice guidelines. DBHS psychiatrist alert DCFS Mental Health Specialist before overriding the flag to allow the prescription for foster children. Information is available on trends and outcomes for general population but not readily available specifically regarding foster children.	Develop data-sharing process to provide DCFS Executive Management with monthly/quarterly reports on Medicaid medication utilization by foster children. Determine if prescribing trends and medication utilization varies between general population and foster children. Develop system and client-specific intervention strategies if any concerning trends or prescribing practices emerge from data review.	October, 2012 January, 2013 **Medicaid Prescription data reports are reviewed quarterly by the psychotropic medication steering committee. This will be an ongoing strategy.**
Availability of mental health expertise and consultation regarding both consent and monitoring issues by a board-certified or board-eligible Child and Adolescent Psychiatrist (agency and individual case level	DBHS Medical Director and Board Certified Child Psychiatrists with the Arkansas State Hospital and DCFS have a strong, collaborative relationship that includes involvement in our DHS Inter-Divisional staffings for Complex Cases, consultation on client-specific medication issues that arise and system-wide	Develop statewide plan for board certified/eligible Child and Adolescent Psychiatrist oversight of medication management for each youth. The workforce issues will impact this plan but telemedicine availability will help tremendously.	July 2014

	planning. Medicaid now allows for medication management for the under-age 21 through telemedicine to be billed. This policy change will enable increased numbers of foster children to receive medication management by the most qualified physicians. Agreement was made with the largest CMHC, covering 14 counties, to have all foster children seen by their board-certified child psychiatrist for the past 3 years.		
Mechanisms for accessing and sharing accurate and up-to-date information and educational materials related to mental health and trauma-related interventions to clinicians, child welfare staff and consumers.	DCFS has worked with UAMS Dept. of Psychiatry and the Partnership to develop and implement training for DCFS staff on trauma informed practices. All Management and supervisory staff have been trained, with FSWs currently being trained.	Explore policies and best practice from other states to help formulate a strategy for sharing data and information across systems. Develop realistic strategy for impacting cross-systems services.	July 2013 June 2014

<u>Services for Children under the Age of Five</u>

<u>Early Intervention/Well-Being:</u>

Arkansas has developed and/or accesses an array of services to ensure the well-being needs of the children under the age of 5 years population is being served. We have been working diligently on strengthening the relationship with our Division of Child Care and Early Childhood Education (DCCECE) as well as local community providers who focus on early intervention services for high risk populations. We utilize data reports as well as trending report at the executive level as well as lower level for identification of needs, services, and monitoring the effectiveness of services provided.

Our APSR reflects strategies within our Health and Mental Health Section and Training sections about various activities that will also impact ensuring the well-being needs of the population served. Some of those activities include:

- Specialized foster families with experience to meet the individualized needs of children entering foster care and families mentoring new foster families
- Services developed to meet the individualized service needs based on accurate data reports for families within the local community
- Dashboard accessible for data management
- Quality Assurance strategies are aligned with state and federal regulations and Arkansas Practice Model
- Trauma Informed Training

Our Annual Report Card has several data indicators that reflect the population between ages 0-5 years. 43% of children in care during the fiscal year 2012 were between the ages 0-5 which was the same percentage as the Fiscal year 2011. Arkansas will not anticipate a significant shift in these numbers until Fiscal year 2014. The three primary reasons children ages 0-5 enter foster care are neglect, substance abuse, and parent incarceration.

The number of children under the age of five projected to be in foster care in FY 2014, compared to the number of such children in FY 2013 is anticipated to be 1,974 in SFY 2014 compared to 2,031 in SFY 2013.

The demographics and characteristics of the identified children are: 66% white/17% black/17% other races and 50% male/50% female.

The link is as follows: http://humanservices.arkansas.gov/dcfs/dcfsDocs/ARC%20SFY%202012%20----FINAL%20FOR%202012.pdf

Below are some Early Intervention /Well Being strategies and initiatives to improve the lives of Infants and Toddlers in Arkansas Child Welfare System

Zero to Three Project, the Arkansas Pilot Court Team Project

Initiative between:

- Division of Child Care/Early Childhood Education (DCC/ECE)
- Division of Children and Family Services
- Zero to Three Project

Purpose:

- To reduce the occurrence of abuse and neglect
- Increase awareness of the impact of abuse and neglect
- Improve outcomes for vulnerable young children

Criteria for AR Pilot Court Team Project:

- Children between 0 – 3
- Parents who are incarcerated for less than a year
- Minor mothers
- Drug and alcohol exposed population
- Children with special needs
- Homeless population

Program Results as of June 1, 2013

Serviced 38 children in 21 families:

- *5 children have found permanence through adoption (an additional 4 children (1 sibling group) have an adoption slated for 6/27)*
- *12 children have been successfully reunified with their families*
- *4 child has found permanence in permanent custody of a relative*
- *7 current active cases with 18 children*

Fetal Alcohol Spectrum Disorder:

- Funded by SAMHSA - contract between DCFS and Northrop Grumman for a period of 4 years 10 months – beginning February, 2008 ending in May, 2012. The FASD program funding was extended one month to allow for final data to be collected and sent to Northrop Grumman – after June of 2012 funded was ended. The Division of Children and Family Services saw the value in continuing efforts to screen children in foster care for FASD and needed to provide services to children who would be reported through the new CAPTA law amendment which now includes reports to the hotline on children affected by alcohol exposure. DCFS decided to continue the program and offer the services statewide, but with modifications listed below.

- Provide early and timely screening, diagnosis and interventions for children ages 2-7 who are in the states custody – (Foster Care). Screening will be done by project staff on children ages 0-18 in the states custody, or receiving services from DCFS, when a referral is made by DCFS staff to the FASD program director. Referrals will be accepted on children who are symptomatic of an FASD and have documented history of alcohol exposure during pregnancy. The FASD program staff will also handle the CAPTA law referrals from the hotline.

- Provide and communicate comprehensive, coordinated and timely case planning, case management, and follow-up to insure appropriate care for children with FASD and their families in order to decrease secondary disabilities.

- The Pulaski County FASD project is located within the Division of Children and Family Services in the foster care unit.

  *Pilot project looking only at Pulaski County children in foster care between the ages of 2 to 7***.** See age change above and note that the referrals are accepted statewide not just in Pulaski County.

  The project staff screens all children who came into foster care in the target age range in Pulaski County. No longer just in Pulaski County

  If they screened positive, meaning there was some reason for concern, we worked with the UAMS PACE team who perform a comprehensive evaluation on all children in foster care and had them to take a closer look at the children who screen positive for an FASD. Another change is because we do not know when a referral will come in, the PACE may have already taken place, therefore the FASD program staff will refer children who screen positive for an FASD to either

ACH genetics clinic, or Dr. Field or Dennis Development Center, both having experience in FASD.

As a result of the CAPTA (child abuse prevention treatment act) amendment in the 2010 legislative session, Arkansas has the following new law affective July 2011 (Arkansas Law ACA 12-18-310):

- Mandates that all health care providers involved in the delivery or care of infants shall:
  1) contact the department of human services regarding an infant born or affected with a Fetal Alcohol Spectrum Disorder;
  2) share all pertinent information including health information, with the department regarding an infant born and affected with a fetal alcohol spectrum disorder.
- The department shall accept referrals, calls, and other communications from health care providers involved in the delivery or care of infants born and affected with a fetal alcohol spectrum disorder.

By identifying FASD early in life we can prevent the secondary disabilities that often occur when children are not diagnosed and appropriate interventions do not happen.

Children in foster care experience difficulties in infancy and early childhood by exhibiting the following: poor habituation, irritability in infancy, poor visual focus, sleep difficulties, mild developmental delays, distractibility and hyperactivity, difficulty adapting to change, and difficulty following directions.

Secondary disabilities associated with FASD include: Mental Health Problems, Disrupted School Experience, Trouble with the Law, Confinement – either inpatient treatment for mental health problems, or incarceration in the jail or prison system, Inappropriate Sexual Behavior, Alcohol/Drug Problems, Dependent Living, and Problems with Employment.

Protective Factors include: living in stable and nurturing home, being diagnosed and receiving early intervention service before age 6, not being a victim of violence, and receiving developmental disabilities services.

The goal to serving children between the ages of 0 to 5 with FASD characteristics are:

- Identify children as early as possible to begin the necessary interventions
- Stabilize the home environment as much as possible
- Facilitate permanency planning with their biological family whenever possible or with an adoptive family when reunification is not possible.

Since the implementation of Arkansas Law ACA 12-18-310:

- *<u># of referrals</u> - 6 CAPTA law referrals to date*
- *<u>Ages of children assessed</u> - newborns*
- *<u># of care of safe plan developed</u> – 4 plans of safe care have been developed – 1 family we were unable to locate – 1 child came into care at the time of the report – the hospital made 2 reports one CAPTA report and one Garrett's law report*
- *<u># of open cases as result of assessment of need</u> -2 supportive services cases opened*
- *<u># in foster care</u> – 2 foster care cases – one of the cases that was opened up as a supportive case became a foster care case due to the mother's alcohol abuse which was*

endangering the children in the home and the plan of safe care could no longer protect the children. Mother needed in-patient treatment.

Arkansas staff are currently providing secondary case work services on the 2 foster care cases that are still open. Other cases have been closed.

Project PLAY
Positive Learning for Arkansas' Youngest

Within DHS, the Division of Child Care and Early Childhood Education partnered with the Division of Children and Family Services to facilitate collaboration between early childcare programs and specially trained mental health professionals.

The goals of Project Play are to:

- Promote positive social and emotional development of children through changes in the early learning environment; and
- Decrease problematic social and emotional behaviors of young children in early child care settings by building the skills of child care providers and family members.

Key Goals for Project PLAY

Ensure that foster children have access to high quality, stable child care.

- Outreach to Better Beginnings approved child care centers in targeted areas to identify high quality centers that are currently serving foster children or may be appropriate for future placements for foster children.
- Work to increase quality in centers at the lower levels of Better Beginnings that are currently serving foster children.
- Use Project PLAY staff to educate biological parents, foster parents, DCFS workers, and other on the importance of a high quality child care environment that remains consistent for the child regardless of changes at home or custodial changes.
- Ensure that child care professionals have the support they need to maintain foster children in quality care settings.
- Educate the childcare professionals about what to expect when working with children who may have experience trauma, and the importance of their role as a stable figure in the life of the child.
- Provide support for the caregivers regarding ways to manage difficult behavior and support healthy social and emotional development.
- Promote communication and consistency between home and school.
- Provide one-on-one education to biological and foster parents about the importance of continuity of child care when the child is transitioning between homes, or if a change in child care cannot be avoided, assist with the transition.

Child Care & Child Welfare Partnership Toolkit:

- This toolkit is designed to enhance the important partnership between child care providers and family service workers in the child welfare system, with the goal of ensuring that foster children get the best care possible.

- Included in the toolkit:

- A brief article about the impacts of trauma on young children and what caregivers can do to help.
- An Information Exchange guide designed to 'jump-start' the sharing of information between the child care provider and the family service worker. You may choose to use this communication guide as is, or incorporate pieces of it into your normal paperwork. The important thing is to share information for the good of the child.
- A Child Progress Update form that teachers may want to complete and give to the family service worker to let them know how the child is doing in the preschool classroom. This information may be useful for the family service worker in the ongoing development of the child's case plan and in reporting to the court.
- Information about how to obtain Immunization records when needed.
- "Saying Goodbye" – Suggestions for creating a smooth transition when it is time for the child to leave the center.
- A Developmental Milestones handout with information on typical behavior for children of different ages and suggestions for teachers/caregivers/parents to promote healthy development in young children.

Natural Wonders/Home Visiting Services

- Dept. of Health received $1.2 M Maternal, Infant and Early Childhood Grant
- Infant Mortality/Support for infant death review and investigation
- Injury Prevention/Safety Baby Showers

Strengthening Families & TIPS

- Strengthening Families promotes priority placement for infants and toddlers in quality Early Head Start/Quality Child Care programs. It builds upon five protective factors:
    - Parental resilience
    - Social connections
    - Knowledge of parenting and child development
    - Concrete support in times of need
    - Social and emotional competence of children
- TIPS
    - Is a parenting education toolkit for professionals working with families of young children
    - Translates, recent research into brief, family-friend messages
    - Trains professionals to engage parents, respond to parents' concerns, and tailor parenting information to individual families
    - Is available to all parents without attending parenting classes
    - Is based on the Brief Parenting Intervention Model

DCFS has the following initiatives in place to educate and shift practice:

- Trauma Informed Care Training
- Values Training – Judges and staff
- Diversion Program for Inpatient Placements
- Structured Decision Making
- SAFE Home Studies
- Subsidized Guardianship
- Differential Response
- Ages and Stages Questionnaire (ASQ)

Other Early Childhood and Child Welfare Initiatives

Our project is officially called the AR Collaboration for Maltreated Children's Care. This project is a response to the Early Education Partnerships to Expand Protective Factors for Children with Child Welfare Involvement grant opportunity. This project seeks to improve access to high-quality child care for foster children by two strategies.

- First, it brings together leaders from the early child care and child welfare systems along with other experts on children's well-being to review existing policies of both agencies. Funded project staff has/will also conduct(ed) qualitative interviews with stakeholders such as infant and child mental health providers, Part C early interventionists, court officers, child welfare workers, early child care providers, and other collateral professionals. These interviews will address the status of the current systems as well as the stakeholders' knowledge of child development and the impact child maltreatment has on child development. From these data sources, the project team is evaluating options for change, developing proposed changes, and supporting representatives from child welfare and early child care in implementing policy (or potentially other systemic) changes.

- Second, training across the state will be proposed to raise the quality of care provided by as many center- or home-based early child caregivers as possible. This project aims to leverage the Arkansas Better Beginnings initiative to raise the number of credentialed providers and increase statewide access to early child care for foster children (the project priority) and all children in Arkansas (a valuable side benefit).

Adoptions

The adoption program offers critical services and supports to Arkansas families and children. Offering a full range of services, from finding families interested in adopting children to providing services to birth parents and adopted children seeking to find biological parents. The adoption program is essential to achieving permanency for many children. The adoption unit's mission is to introduce waiting children to prospective adoptive families and to introduce the concept of adopting older children, sibling groups or children with special needs. The primary goal for the Arkansas Adoption Program is to find a family for every child.

Executive leaders felt the division needed to strengthen the infrastructure necessary to support permanency for children. As a result, the supervision of direct adoption services is transitioning to Area Directors and is no longer a Centralized function.

This change has allowed the division to begin to strengthen its ability to establish integrated teams, accountable to each other versus focusing on roles and responsibilities defined within a specific program structure.

This transition was initiated by the Assistant Director of Community Services who discussed adoptions policy and procedures with Area Directors and Adoption Managers, and clarified expectations for staff affected by this change. The Assistant Director also helped the Area Directors assess staffing capacity and used division data to help them identify additional needs they may have to adequately support the change.

Even though the direct supervision of adoptions staff has shifted to the Area Directors, several program components remain centralized. These include:

- Program Development
- Statewide Recruitment
- Review/Approval of Adoption Subsidies
- Management of the Heart Gallery
- Management of the Voluntary Registry
- Management of Active Subsidies
- Guidance on Best Practices
- Technical Assistance

A Look Ahead

Over the next year, the division will continue to assess the best approach to permanency planning for children, including the development of any needed policies. An Adoption/Resource Meeting is scheduled in August to discuss this transition, noting strengths about the current structure, as well as challenges teams are facing. The division will use the feedback provided from staff to help develop next steps for continued improvements.

There are plans to pilot a strategy of "one worker" –"one child." This strategic model assigns one worker to the child and family at the beginning of the case and the assignment remains regardless of goal changes. Currently, it is typical for worker assignments to change if the child is returned home or if placed in a pre-adoptive placement. DCFS would like to determine if continuity with one worker impacts the timeliness to permanency.

There are also plans to providing additional training, consulting, and coaching of all staff but specifically foster, adoption staff, and resource staff on successful matching of families and other key practices in regards to successful adoptions.

We expect as we move forward, the feedback will allow us to better determine the changes that are needed within this program.

Inter-Country Adoptions

Reports the number of children who were adopted from other countries and who entered into

State custody is zero (0).

Adoption Incentive money:

Arkansas has received Adoption Incentive Money and listed below is the information:

CFDA#93.557 - Adoption Incentive Payment Program

Grant Award #- 1201ARIPP - Amount- $ 1,274,517.00

Grant Period- 10/01/2010 – 9/30/2011

These funds must be obligated no later than 09/30/2014 and liquidated no later than 12/30/2014.

During FFY 2013, adoptions were finalized for 677 children

The Adoption Incentive money was spent on a variety of services that include post-adoption, home studies, and Structured Decision Making (SDM) training. Arkansas is utilizing SDM for all assessments of families regardless of whether they're in home, out of home, or pre-adoptive families. The SDM training for supervisors is scheduled for all Adoption supervisors, unit supervisors and county supervisors for May and June. It is mandatory for all supervisors, Area Directors and CACD Supervisors. Since children placed in pre-adoptive status are still considered in the legal custody of DCFS, we are responsible for ensuring health and safety of the children during this pre-adoptive time. Our expectation would be that as adoptive staff visit these families and ensure the stability of the placement they will use SDM techniques in accessing the health and safety of these children.

Arkansas Adoption Program will continue to invest resources in the following activities:

- To partner with Chanel 11 for their "A Place to Call Home", featuring children available for adoption. The cost includes thirteen weekly segments that will run from September through November and a monthly feature for one year. This is a valuable recruitment tool for adoptive families and we include information on fostering, mentoring teens transitioning out of care, and other areas of need. We are planning a segment featuring Youth Advisory Board members discussing the importance of sibling connections**.**
- Our Heart Gallery Website is featured with banners for viewing the Foster Care and Preventive Services Website.
- Promotional items and updating adoption informational material to be used at Heart Gallery presentations, recruitment activities, and other adoption events.
- Contracted Reactive Attachment Disorder RAD therapy for pre and post adoption services.
- Respite for post adoption services.
- Other post adoption services either not covered by Medicaid or for children who do not receive Medicaid.
- Recruitment includes annual adoption picnics where prospective adoptive families and children waiting adoption are invited to participate.

The Adoption Manager has developed a plan to assess the targeted recruitment strategy for the children that have been waiting the longest for adoption. Strategy plan below:

Statewide Plan for Permanency for Waiting Children

The Goal is to Place/Review the top 100 Children who have been waiting for Adoption

Strategy/Action	Source	Next Steps	Data/TA needed	Dates	Challenges
1. Request Report	Chris Price	Review Report	Report on goals of children in Foster Care	~~5/1/12-5/5/12~~	N/A **Completed**
2. Compose list by Name, county, area, Adoption Specialist & Adoption Supervisor	Adoption Staff	Distribute to staff, review by A.S. and Supervisors	N/A	~~5/3/12-5/15/12~~	~~N/A~~ **Completed**
3. Schedule Permanency Roundtables	All persons involved with Child – A.S., FSW, AAL, CASA, Supervisors, OCC, Facilitator and child for part of the review if appropriate	Mine cases to determine if there are any relatives, fictive kin, or others who may be a viable placement. May require court's permission in some cases.	N/A	~~6/1/12-9/30/12~~ **In Progress**	Involvement by all needed participants and agreement on assignments and plans
4. Intensive Child Specific Recruitment	Adoption Specialists and others	Review goal	N/A	N/A **In Progress**	Finding an appropriate permanent placement

Adoption Recruitment and Retention Plan:

The goals and objectives of our recruitment and retention plan are to identify process and maintain permanent homes for children placed in foster care. These families will be able to meet all standards required for approval as an adoptive resource in Arkansas. Adoption and Foster

care work together to recruit homes for children in foster care since more than half of adoptions are foster parent adoptions.

Ages of All Children with Goal of Adoption at End of SFY 2013

Age Range	Count	Percentage (%)
0 to 1 Years	88	10.1
2 to 5 Years	211	24.1
6 to 9 Years	205	23.4
10 to 13 Years	224	25.6
14 Years and Older	147	16.8
Total	***875***	***100.0***

Gender of All Children with Goal of Adoption at End of SFY 2013

Gender	Count	Percentage (%)
Female	388	44.3
Male	487	55.7
Total	***875***	***100.0***

Race/Ethnicity of All Children with Goal of Adoption at End of SFY 2013

Race/Ethnicity	Count	Percentage (%)
WHITE	526	60.1
BLACK	183	20.9
MULTIPLE	115	13.1
HISPANIC	47	5.4
AIAN	1	0.1
UTD	3	0.3
Total	***875***	***100.0***

General recruiting plans:

- To continue to use Websites and media to display information regarding adopting a child out of foster care and to offer education and support to adoptive parents-This would include Heart gallery websites, and Channel 11.
- Contact with local civic and professional groups, churches and organizations-Maintaining communication with Pulaski County Adoption Coalition, The CALL, CASA, and utilizing these contacts to broaden into Teachers, Nurses, and Counseling Associations.

- Continue to work with volunteers and foster/adoptive parent to plan activities for children available for adoption to include Annual Disney Extravaganza, The Conway Rotary Picnic, and the Annual Picnic in North Arkansas.
- Continue to display the Heart Gallery photos in area churches that includes the information and website to read about and begin the inquiry process of adoption
- Continue to hold Inquiry meetings for those interested in adopting
- Access local stations, newspaper and radio stations to have the adoption information and events featured to the Public.
- To offer quality support, education, timely response and information on available resources to adoptive families needing assistance or support
- Display the Heart gallery and information on becoming an adoptive parent or foster parent in local churches, media, Riverfest.

Recruitment of families of Minority:

- Develop a relationship with local and area churches for minorities , asking to speak at their congregations and identifying volunteers or church representatives from each church to assist us in recruiting families of minority within their church and community
- Identify adoptive families of minority that would attend meetings with various groups and organizations to talk about their success as an adoptive family.
- Ensure that adoption staff is well educated regarding cultural diversity.
- Display the Heart gallery and information on becoming an adoptive parent or foster parent in local churches, media events, and River fest.
- Incorporate the general recruitment plan with all aspects of recruitment for minorities.

Individual Child Recruitment:

- To continue to use websites and all media resources to support a child who is in need of a forever family.
- Continue with the adoption picnics to allow the opportunity for open and approved families to meet and interact with the children who are in need of a forever family.
- Speak to approved families individually and at the Meet and Greets for child specific recruitment.
- Continue to refer children in need of a forever family to Channel 11 for exposure for those child/children.
- Continue to refer children to AdoptUsKids and Adoption.com.
- For staff to be knowledgeable about the children on their workload that are in need of a family and to use that child's strengths when presenting child specific recruitment information.

Disaster Plan

The division is continuing its efforts to implement disaster preparedness training and planning across all levels of the Division.

DHS, including DCFS, works with Emergency Management Services as needed when a disaster occurs.

The Business Continuity and Contingency Plan are updated on an annual basis is attached. This plan includes similar activities in relation to Child Protective Services, Foster Care Services, Adoptive Services, Eligibility Reporting and Compliance.

- Activities include:
    - Informing staff on BCCP
    - Provide staff identified or role a copy of plan
    - Activate risk mitigation
    - Train back-ups
    - Conduct an exercise on day run of contingency action to identify gaps
- The following strategies are completed with a continuous quality improvement process in place as we learn from each disaster that occurs:
    - All counties have a plan in place to respond to a disaster with DHS/DCO identified as lead.
    - DHS established a protocol for contacts and Centralized Information. This activity is included as part of new employee orientation. The BCCP will "recover" the information in system when implemented in the event of a disaster.
    - Each county has an established protocol for "check in" in the event of a disaster.
    - The division has a protocol in place to debrief after a disaster and determined what is needed to improve or change. (Executive staff)
    - Each county partner with local law enforcement or 1st responders if needed to respond to high risk child welfare issues or safety of child is compromised.

Status Update: During the month of May and June, AR experienced several storms which resulted in tornadoes and flooding. The local staff kept the central office apprised of any impact on staff and/or clients. Although there were a couple of foster parents that had to be evacuated due to flooding, no one was harmed. DCFS staff and the local community continue to support these families.

The following strategies remain in effect for continued implementation:

- Emergency contact form and preparedness information guidance has been developed for foster parents. This information will become a part of a foster home and electronic and hard copy files maintained.

Status Update: This is being reassessed and will be assigned to the Foster Care Unit Administrative Support. The emergency contact form will be a part of the packet that is sent to all new foster parents that are opened within the last month. The foster care unit will send this welcome packet to new foster parents beginning September 1, 2013. The foster parents will submit the emergency contact form back to the foster care unit for maintenance. Over the 2013-2014 year, we will work with CHRIS staff to add to the provider screens a place to document this information.

- Will continue to work with other child serving agencies and partners to assure appropriate and timely response to continue critical case management activities**.** Within DHS, DCFS receive notifications anytime there are electrical outages or phone outages to assess whether they interrupt the daily business. DCFS is also notified in the event of storm damages or other natural disasters.

Workforce Demographics

Information on Child Protective Service Workforce

For child protective service personnel responsible for intake screening, assessment, and investigation of child abuse neglect reports, we have the following data available:

DCFS averages:		***CACD averages:***		***Hotline Operator averages:***	
Female	**89%**	**Female**	**73%**	**Female**	**84%**
Male	**11%**	**Male**	**27%**	**Male**	**16%**
Race:		***Race:***		***Race:***	
Caucasian	**51%**	**Caucasian**	**88%**	**Caucasian**	**65%**
African American	**48%**	**African American**	**11%**	**African American**	**34%**
Either American Indian or Hispanic	**With less than 1%**	**Native American**	**1%**	**Other**	**1%**
Ages:		***Ages:***			
20-30	**27%**	**20-30**	**12%**		
31-40	**28%**	**31-40**	**34%**		
41-50	**26%**	**41-50**	**27%**		
51-60	**14%**	**51-60**	**19%**		
61-70	**5%**	**61-70**	**8%**		
Educational Level:		***Educational Level:***		***Educational Level:***	
BSW	**23.1%**	**BSW**	**21%**	**Related degree**	**96%**
Related Degree	**43.2%**	**Related Degree**	**65%**	**BS/Master's Degree related field**	**3%**
MSW	**3.7%**	**MSW**	**9%**		
Associate	**6.3%**	**Associate**	**2%**		
No Degree	**23.4%**	**No Degree**	**3%**		

FSW turnover rate is 21%. It is lower than in previous years. It has been as high as 28% in the past 7 years.

Supervisor to Worker ratio is 1 to 4-6. This average is impacted due to turnover of workers.

DCFS Family Service Worker qualifications:

The formal education equivalent of a bachelor's degree in social work, sociology, psychology, or a related field; plus successful completion of a six month training class within agency core training period. Additional requirements determined by the agency for recruiting purposes require review and approval by the Office of Personnel Management. OTHER JOB RELATED EDUCATION AND/OR EXPERIENCE MAY BE SUBSTITUTED FOR ALL OR PART OF THESE BASIC REQUIREMENTS, EXCEPT FOR CERTIFICATION OR LICENSURE REQUIREMENTS, UPON APPROVAL OF THE QUALIFICATIONS REVIEW COMMITTEE.

Training Required:

8 modules (3day) 10 weeks, new worker competency based training model including Structured OJT activities

The pay scale is as follows:

Family Service Workers - $30,713 to $52,167 for those with 15 years or less

- For FSWs with 16 years or more the max pay rate is $56,340

Family Service Worker Supervisor - $$37,332 to $62,616 for those with 15 years or less

- For FSW Supervisors with 16 years or more the max pay rate is $67,626

Area Directors - $57,914 to $86,072 for those with 15 years or less

- For Area Directors with 16 years or more the max pay rate is $92,958

Explanation of pay scale:

The Arkansas State employee pay plan does not allow entry into the system at higher than the entry-level pay rate unless the agency makes a special request to bring them on at the exceptionally well qualified level.

The approval for this does not rest with the individual state agencies, and must be presented and approved to the state Office of Personnel Management.

In the case of the higher grade state employees, a request to hire at the exceptionally well qualified level may have to be presented to the legislative committee on personnel and budget.

Workload/Caseload averages:
Below please find a brief summary of how we calculate workloads. Our workload report is broken down into multiple categories.

Investigation - Primary	DCFS receives **1** credit for every investigation that is open as of the end of the reporting month and for which it serves as primary. The DCFS primary worker and his/her Area and County also receive 1 credit.
Investigation - Secondary	DCFS receives **0.5** credit when it serves as secondary for a CACD investigation open as of the end of the reporting month. If multiple DCFS workers serve as secondary workers for the same CACD investigation, 0.5 is divided among the DCFS secondary workers, but the state as a whole receives a maximum of 0.5 credit. The DCFS secondary worker and his/her Area and County also receive 0.5 credit (or less depending on the number of secondary workers).
Foster Care Cases	DCFS receives **1** credit for every child in foster care as of the end of the reporting month. Foster children whose cases are assigned to an adoption specialist or those in ICPC placements are excluded from this measure. If a foster child is placed in a county which is different from the county of its primary worker, the 1 credit is divided between the primary county/worker and the county of placement.
In-home Protective Services Cases	DCFS receives **1** credit for every Child Protective Services case that is open as of the end of the reporting month in which no child is in foster care (children reside at home). The case as a whole receives 1 credit regardless of the number of children in the home. The DCFS primary worker and his/her Area and County also receive 1 credit.
Supportive Services Cases	DCFS receives **1** credit for every Supportive Services case that is open as of the end of the reporting month. The case as a whole receives 1 credit regardless of the number of children in the home. The DCFS primary worker and his/her Area and County also receive 1 credit.
ICPC	DCFS receives **0.25** credit for every child involved in an ICPC case open as of the end of the reporting month. This pertains to children who are placed in Arkansas from out of state as well as children placed out of state from Arkansas. The DCFS primary worker and his/her Area and County also receive 0.25 credit for every child.

Differential Response (DR)	DCFS worker receives **1** credit for every DR referral that is open as of the end of the reporting month. The DCFS primary worker and his/her Area and County also receive 1 credit.
Calculation:	All of the credits listed above are added and the sum is divided by the number of workers responsible for these cases.

We have also added a "new method" of counting workload to our calculation that is shown side-by-side with the method above. The new method does not give any credit if an investigation has been open for more than 60 days or if an in-home protective services case or a foster child has not had a face-to-face visit from a caseworker in the past three months. As mentioned previously, the new method is shown side-by-side with method calculated above in our workload reports.

Below are two maps that represent the averages by county:

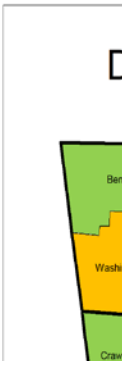

The Division's cultural alignment efforts with the Practice Model Goals and Principles include creating an integrated competency based training model designed to address skill development at all levels in our Child Welfare System.

In support of this goal, Program Improvement (PIP) efforts in FY 2011 initiated a comprehensive review of the current DCFS training system. This review and subsequent development activities continues into Fiscal Years 2012 and 2013.

Lessons Learned and Moving Forward

- The current competency based training model is limited to new staff training (first year of employment) for FSW, FSW Supervisor, and Program Assistant positions.

The below figure illustrates the current components of the New Staff Training (NST) Model.

Current NST Model

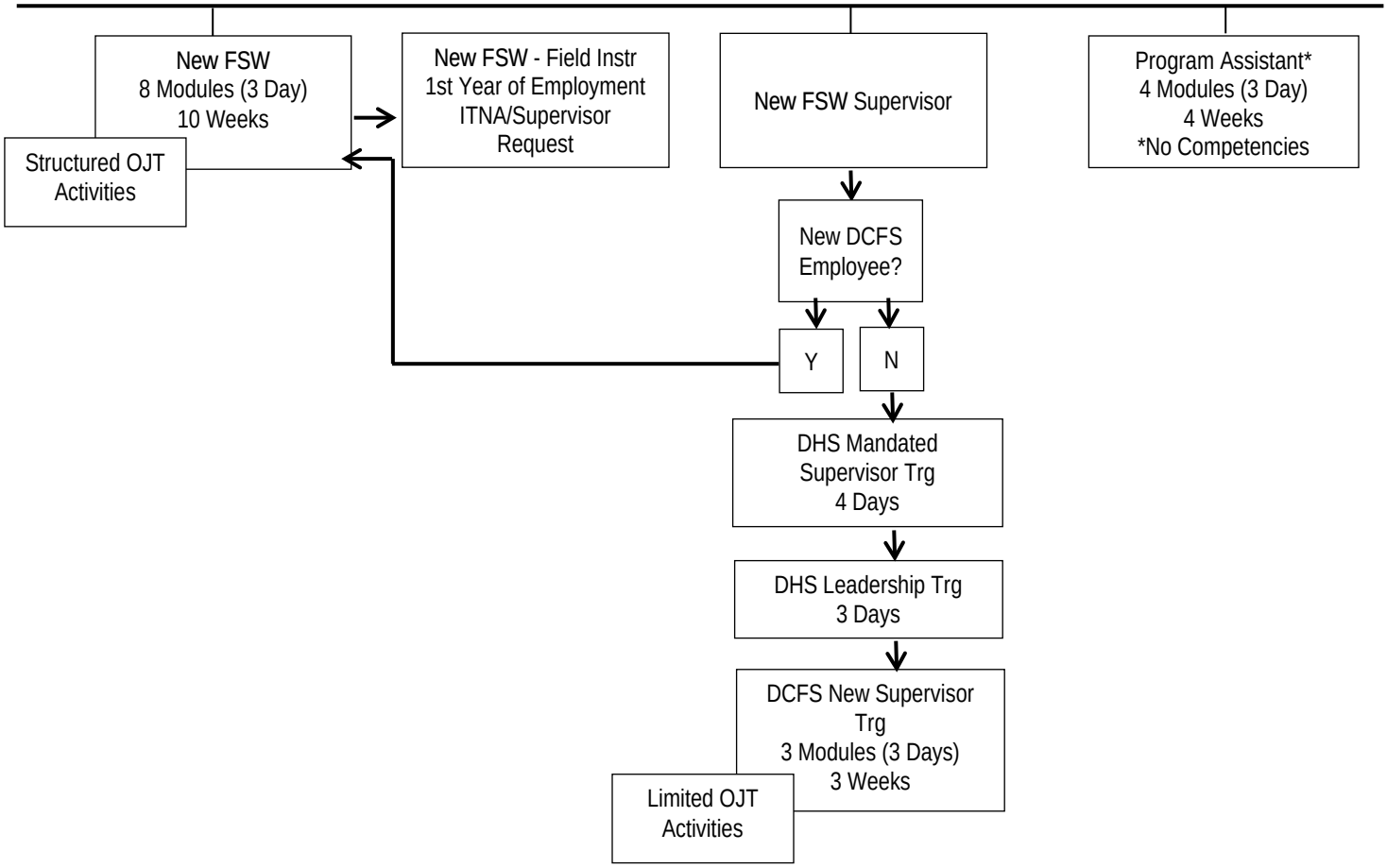

- Defined statewide training programs (beyond the first year of employment) addressing intermediate and advanced skill development for FSW and FSW Supervisors do not yet exist-even though intermediate and advanced level competencies do.
- Feedback from a variety of sources indicates supervisors and managers often do not know the competency based training model and it is not supported when supervisors and managers:
    - Assign heavy caseloads while an employee is still in new worker training.
    - Do not provide a thorough orientation to the office and community resources.
    - Neglect to provide sufficient supervision supporting the application of best practices taught in new worker training.
    - Inform the worker what s/he learned in the classroom does not apply "in the real world."
- The current training system lacks defined competencies for the following positions:
    - Area Director (Central Office)
    - Program Managers (Central Office)
    - Program Administrators (Central Office)
    - Executive Staff (Central Office)
    - Resource Workers (Field Staff)
    - Program Assistants (Field Staff)
    - Transitional Services Coordinators (Field Staff).

Fiscal Year 2013 Accomplishments

New Staff Training-A review of the current New Staff Training (NST) provided for FSW and FSW supervisors was conducted in FY 2011. This review included examining systemic issues impacting the effectiveness of the competency based training model and comparing a newly revised functional job description with the established competencies for the FSW and FSW Supervisor positions.

The recommendations/findings of new FSW training review include but are not limited to:

- Create an educational document about the training plan for supervisors and managers.
- Discuss the roles associated with the training plan with supervisors and managers (informational meetings/quarterly supervisor meetings).
- Develop a supervisor training program that includes skills development in support of competency based training.
- Examine the DCFS orientation process and how it can be used to engage the supervisor in skill development.

2012 Update: The above items have been incorporated into the Arkansas Mountains and Plains Implementation Center project (AR CIRCLES) strategic planning process. More specific information is provided later in this report.

The recommendations/findings of new FSW Supervisor training review include but are not limited to:

- Identify field trainer skill sets necessary for working effectively on supervisory skill development.
- Develop structured on-the-job training activities for new supervisors.

FY 2013 Update

New Staff Training for FSWs

Additional work regarding the review of the NST for FSWs has been initiated by the MidSOUTH Special Projects Director.

The Special Projects Director is responsible for curriculum development and its implementation at the five (5) MidSOUTH Training Academies. Her research has been prompted by the information the Division has shared at quarterly partnership meetings, Training Skills and Development Team (TSDT) meetings, participant evaluations, training survey results, participation in the MPCWIC (AR CIRCLES) project, and other activities related to the Division's ability to meet children's safety, well-being and permanency needs.

Her research includes but is not limited to:

- Contacting other state child welfare training staff to learn about different program designs.
- Conducting research using online resources.
- Initiating conversations with various DCFS program managers.
- Exploring the use of online training strategies to address policy/procedures, while including some form of measure to evaluate the participants' understanding and application of policy guidelines.
- Exploring how to restructure content - allowing more time to target best practice skill development in the classroom.
- Exploring how to shorten length of training without compromising the training needs of new workers with varied educational backgrounds.
- Registering for and sponsoring PDU Manager and one Area Director to attend an evidence based training related to brain science and education strategies (June 2013).

In an effort to address critical staffing/service needs in Areas 1 and 2, the Fayetteville MidSOUTH Training Academy has also offered at least two modified versions of NST for FSWs over the course of FY 13. The first training modification occurred in the fall of 2011 (FY12).

FY 12 Areas 1 & 2 NST Modification 1

Following the placement of three (3) stipend students in Sebastian County and one (1) stipend in Crawford County, the NST location was moved to a site in close proximity to the Sebastian county office. DCFS Administrators requested this modification based on the belief that by reducing time spent traveling, the new hires would have more opportunity to support casework activities (part of the OJT) in the county office. Administrators also believed the internship experiences of the stipends had also provided earlier exposure to DCFS processes than normally afforded to newly hired staff.

Because training was moved and access to resources changed, some modifications to training content also occurred. Participants still traveled to the Fayetteville Academy for CHRIS related training. One participant was from Area 1.

FY 13 Areas 1 & 2 NST Modification 2

The Area 2 Director initiated a revised design (in collaboration with Academic Partners and PDU) after the above modifications had little to no positive impact in terms of skill development and staff retention.

Note: The Area 1 Director was consulted throughout this process and agreed to the proposed design for new Area 1 staff as well.

The following provides an overview of the resulting "lessons learned" from the first training modification efforts:

1. Participants (new FSWs) worked many hours following training, impeding their ability to learn, as well as impacting retention of new staff.
2. Stipend internship experiences did not appear to create a "readiness" over that normally seen in other new hires.
3. New FSWs needed to be matched with one experienced FSW (mentor) versus working with multiple FSWs in a stressful and hectic office environment.
4. FSW mentors also needed more consistent support in managing high caseloads; while new staff needed DCFS supervision and guidance in learning case management roles and responsibilities.
5. New FSW primary assignments (investigation, in home or foster care) needed to be determined during the hire process to help establish more stable support once employed. Attention to exposing new FSWs to all service areas remained important.
6. Supervisors needed to be more engaged in the training and mentoring process.
7. County staff needed better preparation to support new FSWs throughout the training process.
8. Time spent completing OJT (2 days) was not enough time for new staff to apply knowledge gained during classroom instruction, while also providing much needed support to experienced FSWs with high caseloads.

Using the above experiences to inform the second modification process resulted in the:

1. Development of coordination/communication tools for supervisors and mentoring staff to use during OJT weeks. These tools were meant to facilitate weekly case progress updates between the new FSW, the FSW mentor, and supervisory monitoring. Communication tools were developed by the local Academic Partnership team.
2. Development of a staff orientation to go over NST modifications and to explain associated roles/responsibilities of FSW mentors and supervisors prior to training. The orientation meeting was held two weeks prior to start of training in September 2012.
3. Merged/edited classroom content to provide five (5) day training modules (versus 3 day) followed by one (1) week of OJT.

FY13 Areas 1 & 2 NST Modification 3

Continuing to use feedback from Partners and county staff, the NST schedule was adapted a third time.

Feedback included but was not limited to:

1. New FSWs were drained and struggled attending to and participating on day 4 and 5 of classroom instruction.
2. New FSWs were still working after hours following class.
3. Supervisor involvement/support of the training process remained minimal.
4. Communication tools designed to help sustain the exchange of case information in casework activities and OJT assignments were underutilized.
5. New FSWs and mentoring FSWs liked the extended week of OJT. This allowed them more time establish relationships with family members and to apply classroom instruction more often.

The third round of adaptations focused on reinstating some three (3) day training modules while maintaining extended OJT days whenever possible.

Impact of Training Modifications with Other Area Directors

The adjustments in Areas 1 and 2 resulted in increased interests by other Area Directors to modify (based on their staffing needs) the current structure of NST for FSWs. There was some concern the Area Directors did not have enough information to fully understand the amount of planning and preparation that went into the modified training cycles described above. The absence of clear positive impact associated with these modifications was also a concern.

In an effort to respond to Area Directors while maintaining integrity of the statewide training model, the Area 2 Director provided an overview of the planning and related strategies used in the modification process, including the on-going struggle in achieving the desired outcomes associated with the modifications.

Following this overview, the Assistant Director then asked the Area Directors to identify the changes they would like to see made to the NST program for FSWs.

The preliminary feedback indicates most, if not all, of the Area Directors would like to see the time spent in the county office (OJT) between training modules extended to 7 days.

New Staff Training for FSWs: Next Steps

- Discuss Area Director feedback regarding NST for FSWs at the June 10th TSDT meeting.
- Identify impact of IV-E Waiver on NST for FSWs.
- Identify associated action items and next steps, including defined measures to evaluate outcomes.

Supervisor Role in NST for FSWs

A Training Plan overview document outlining the supervisor's role in the New FSW training process was created as a part of the AR CIRCLES (MPCWIC) project. This content will be incorporated into the Supervisory Handbook, which is in last stages of development at the time of this update.

See *FY130AR CIRCLES Updates* in this report for more information.

Supervisory Skills Development: Supporting Competency Based Training

In conjunction with the AR CIRCLES (MPCWIC) strategic plan, a Supervisory Practice Model (SPM) was created by a workgroup comprised of DCFS supervisors, county office and central office staff.

The SPM was presented to county and central office supervisors in January 2013. Initial feedback from supervisors was very positive and the SPM was viewed as a useful guide for all supervisors at all levels of the organization.

The SPM identifies 10 key areas of supervision designed to convey our vision of supervisory practice into day to day work.

Areas marked with an asterisk have a direct relationship to supporting the goals of the Division's competency based training program.

These areas are:

1. Administrative
2. *Communication
3. *Decision Making
4. *Developing Staff
5. *Formal Case Consultation
6. Leadership
7. *Policy
8. Self-Care
9. *Supporting Staff Success
10. Teaming

The SPM then uses "markers of effective supervision" for each of the above areas. These markers describe preferred supervisory practices to which they hold themselves accountable. These "markers" are meant to be specific enough to help supervisors self-assess and improve performance while building accountability and consistency of practice throughout the state.

In addition, the model provides a series of "critical thinking questions" which support the process of self-assessment. These questions are designed to determine how well supervisors are achieving the markers of effectiveness and will help them identify strengths, areas needing improvements, and next steps. The critical thinking questions are meant to serve as a tool for supervisors at all levels.

Finally, each area includes statements of "expected outcomes". These outcomes support monitoring performance of supervisors by helping to describe the results the Division expects to see (outlined in the markers of effectiveness). If the outcomes are not being achieved, supervisors are asked to continue improving their knowledge, skills, and abilities in the identified area.

Implementation Activities/Next Steps: Supervisory Practice Model

- While the initial implementation focused on individual self-assessment and skill development, some Area Directors have already begun using this tool to address local management training needs using the appropriate training resources to support skill development in the identified areas.
- The SPM has been added to the *New Supervisor* training curriculum and will be included for the first time in the July 2013 class.
- The SPM has been incorporated into the Supervisory Handbook and will be highlighted again during the July Quarterly Supervisor meeting when the Handbook is launched.

- The Assistant Director dedicated a portion of the Quarterly Supervisor meetings to facilitate on-going discussion with supervisors about how they are using the SPM to improve supervision in their offices.
- Finally, the SPM provides the framework to develop a Child Welfare supervisor training program-a year 2 goal of the AR CIRCLES project. The TSDT will assume the primary role in coordinating the development of the program, utilizing stakeholder feedback and involvement in the process.

The IV-E Academic Partnership has created a structured Supervisor On-the-Job (OJT) program for new supervisors promoted within the Division. DCFS approved this program in late spring 2013 and it is scheduled for implementation at the beginning of FY14.

Note: This program was also reviewed to ensure alignment with the SPM.

This program is designed to provide basic knowledge and skills to help transition from the role of a FSW (or related position) into the role of a FSW or DCFS County Supervisor.

Program Highlights

- Targets new supervisors promoted within the Division. While designed for newly promoted supervisors, components of the program may also be applicable to staff who have been in a supervisory role with the Division for more than one year.
- Uses a unique three (3) month OJT program approach. Traditionally, OJT programs are used to help in the transfer of learning from the classroom and occur in conjunction with the training.
  With this program, staff participates prior to attending the New Supervisor Training offered by MidSOUTH. Keeping in mind the busy schedules of child welfare professionals, the developers have tried very hard not to add additional work for the new supervisor. Instead they have focused on building the program based on activities the supervisor is already expected to do.
- Focuses on using data, along with personal observations of performance, to coach and develop staff skills and best practices. *Note: This program does not teach how to use supervisor reports. The Super CHRIS training addresses this.*
- Integrates with key supervisory roles and responsibilities in the Arkansas Supervisory Practice Model and is congruent with the goals and principles of the Arkansas Practice Model.

<u>Supervisor OJT Program: Next Steps</u>

- Determine implementation details, including Division outcome measure statements.
- Define Field Trainer skill sets necessary to support desired outcomes.
- Define evaluation methods to be used within the Academic Partnership and the Division. Evaluation methods need to answer (at a minimum) these questions:
  1. How will Area Directors and/or County Supervisors evaluate the application of learned skills for participating staff? Should a parallel process be considered? If so, what does that look like?
  2. How will the Academic Partnership evaluate the quality of field training support provided to participating staff in the OJT program? How does the evaluation method address Field Trainer skill development/supervision?

Field Trainer Skills

The Academic Partnership Training Designer, and the Special Projects Director with MidSOUTH, began working on the development of field trainer competencies in FY13. Research efforts identified four (4) proposed competency domains as a framework to initiate the work.

These domains are:

- Professional Standards and Use of Self
- Core Training Skills
- Mentoring and Coaching Skills
- Advanced Training Skills

In December 2012, the Academic Partnership utilized a new feedback process, Knowledge Cafes, as an engagement tool to gather feedback from field trainers, coordinators, and PDU staff about associated skills for each of the above four (4) domains.

A Knowledge Café uses a facilitated "table talk" format to promote small group discussion and feedback on a specific topic.

The feedback provided at the December Knowledge Cafe was shared at the February 2013 Quarterly Meeting.

Field Trainer Skills: Next Steps

1. Review the Supervisory Practice Model and compare to proposed field trainer competency domains.
2. Send (IV-E Coordinators) field trainer job descriptions to the Academic Partnership Designer.
3. Identify knowledge, attitudes, skills, and values of a field trainer.
4. Post an online survey to gather other comments about competency domains.
5. Research self-efficacy aspects of developing field trainer competencies.
6. Identify field trainer skill assessment methodologies.
7. Determine if current field training assignments align with current skill levels.
8. Determine skill development methodologies.

Continuing Education-Area Directors and supervisors initiate training requests with MidSOUTH trainers, field instructors, Office of Chief Counsel, Organizational Development and Training (ODT), and/or community partners in their area/county.

Each Area Director has been encouraged to use a variety of factors when determining training needs in his/her area:

- Area improvement plans.
- QSPR findings.
- CHRIS data reports and/or case reviews.
- Direct observations of staff interactions with families and/or community partners.
- Case consultations with staff.
- Feedback from community partners such as judges, System of Care partners, mental health providers, etc.

- Requests from staff.
- Individual training needs assessments (ITNA) with Academy and Field Instructors.

DCFS has yet to define a process for linking training experiences with practice change (application of training) and outcome measures.

The Division continues to believe the role of the supervisor is critical to this process and have been discussing this in the AR CIRCLES strategic planning meetings as well as in meetings with Area management and our University Partnership.

PDU participation in monthly planning meetings between Area Directors and IV-E Coordinators has enabled the Division to work more closely with ODT on skill development activities for managers and staff that may not be IV-E allowable or is not allowable at the 75% rate.

The Area 1 Director requested ODT's assistance in the assessment and development of team work among area leaders. Through a collaborative effort, the planned process included:

- Conducting a needs assessment with the planning team (Area Director, select Field Trainers, ODT Trainer, and PDU Manager).
- Holding a "Kick off" meeting to provide an overview of the process to local supervisors.
- Completing an online survey (local supervisors). This survey provided a baseline understanding of the strengths and potential challenges related to teamwork capacity in Area 1.
- Planning meeting to discuss the survey results with the planning team and plan next steps.
- Administer the DISC behavioral style inventory and discuss how relating style differences support and detract from team functioning.
- Discuss survey results with supervisory team, discuss how relating styles may be influencing survey findings and plan next steps.

The above activities were completed in the fall of 2012.

The Area 7 Director requested ODT's assistance using a similar process. Instead of focusing on the assessment and development of team work among county and unit supervisors, she would like the plan to focus on the development of teamwork in Jefferson County.

The above activities (at different stages) continue in both Areas and support re-establishing a partnership with ODT and our training system.

FY 2013 Updates

Determining how to link training experiences with practice change (application of skills addressed in training) and outcome measures continues to be a challenge.

Our efforts to address this through discussions at monthly or quarterly meetings between Area Directors and IV-E Coordinators include routinely asking: "How will you know staff is using the knowledge/skills this training is designed to address?"

One Area Director outlined the following strategy when asked this question while discussing a proposed safety assessment training:

- Communicate to county supervisors to randomly review (monthly basis) in-home and foster care case record contacts looking specifically for mention of a safety assessment

during a home visit. Note how many reviewed records reflected practices taught in the training. Note how many reviewed records did not reflect practice and the action taken to address and monitor this.

- Ask Area Coordinator to also randomly review case records using the above methodologies and tell supervisors about this Area-wide quality assurance plan.
- Ask for specific examples during monthly office visits with individual supervisors and during monthly supervisor meetings.

Partnering with Organizational Development and Training (ODT)

PDU participation in monthly/quarterly meetings with Area Directors and IV-E Coordinators continues to help the Division recognize and work more closely with ODT on skill development activities. PDU has also provided the Area Directors ODT course descriptions, updated in April 2013.

As mentioned previously, some Area Directors have used the SPM to target specific supervisory development activities. In cases where ADs wanted training related to administrative areas of supervision, ODT is typically the appropriate training resource.

Partnering activities with ODT are not limited to contact with PDU. The ODT manager and designated trainers have also participated in two (2) AR CIRCLES workgroups (Hiring and Supervisor Handbook) and the Assistant Director has also invited ODT to an Area Director meeting to discuss the Culture Survey results and training resources.

The above activities have resulted in:

- Team building trainings for staff and foster parents.
- Stronger AR CIRCLES work products.
- Performance coaching clinic (new training series developed by ODT) offerings to supervisors in Areas 4 and 7. Soon to be implemented (in modified format) in Areas 1 and 2.

Training Initiatives and Practice Change

The increased involvement of the Assistant Director and her administrative staff in TSDT meetings have also helped to better inform the professional development processes, including (but not limited to) providing a planned training in July to develop a stronger understanding of the link between data and program improvement initiatives for field trainers and coordinators in the Academic Partnership.

The PDU Manager routinely asks about the relationship between administrative oversight of best practices and targeted skills development (initiated through specific Division trainings) during various Executive strategic planning meetings.

For example, how will the Division know the skills taught in Structured Decision Making are being effectively used by staff? What are our messages/expectations in support of this?

FY13 Best practice and Program [development] Related Training

Best practice and program development related training offered in fiscal year 2013 included but was not limited to:

- Structured Decision Making (SDM) (In-Home and Foster Care Cases)

A total of 218 DCFS staff attended one (1) of 17 regional Structured Decision Making for Caseworker training sessions.
This two day training covered safety (immediate) versus risk (possible harm without safety planning) as a baseline to then train staff on extending SDM case management practices in ongoing contacts with families in protective (in-home) and foster care cases.
A total of 41 DCFS and CACD staff attended one (1) of three (3) Structured Decision Making training sessions for Investigators.
An estimated total of 160 DCFS and CACD supervisors will have completed one (1) of 10 regional Structured Decision Making for Supervisors training by August 2013.
This 2-day training helps supervisors ensure staff is using best practices taught in Structured Decision Making (SDM) by focusing on supervisory practices related to safety assessments throughout the life of a case.

- Permanency Values (All case practices)
  Total of 100 DCFS staff and community stakeholders attended three (3) locally provided training sessions. The Permanency Coordinator, has assumed the lead training role for the Permanency Values and Orientation trainings. She has recently completed a TOT sponsored by Casey families certifying her to provide the PRT skills training as well.
- SAFE (Structured Analysis Family Evaluation) Supervisor Training (Foster Care & Adoptions)
  A total of 34 DCFS, Contract Providers and CALL Volunteers attended one of three (3) centrally located sessions.
- SAFE Training
  A total of 73 DCFS, Contract Providers and CALL Volunteers attended one of three (3) centrally located sessions
- Building Better Bridges (All case practices)

  DCFS collaborated with the University of Arkansas at Little Rock's (UALR) "Arkansas Collaboration for Maltreated Children's Care" project as part of the federal "Early Education Partnerships to Expand Protective Factors for Children with Child Welfare Involvement" grant opportunity. The grant project objective is to better align the child welfare and early childhood education systems in the states receiving the grant. In Arkansas this project is called Building Better Bridges.

  Part of the work associated with this grant project resulted in the development of a two-hour in-service training for both child welfare agency staff as well as early child care providers regarding the effects of trauma on child development, the impact that the quality child care can have on children involved in the child welfare system, as well as specific information about Arkansas's Quality Rating Improvement System (QRIS), Better Beginnings. To date, 18 sessions of this training have been offered to DCFS staff.

- Building a Trauma Informed Workforce (All case practices)

  A total of 187 field staff attended the one day Trauma Informed Workforce training.

  The Academic Partnership also provided one hour training, *Promoting Resilience: A Trauma Focused Training* for 67 supervisors. This one hour session was designed to meet the legislative mandate for one hour of annual grief and loss, while allowing the division to remain focused on the trauma focused intervention strategies.

As a part of sustainability planning, DCFS and the Partnership continued collaborative work with UAMS to develop additional trauma focused "Lunch and Learn" training for field staff over the next three years.

The training concept is to deliver training content using a "distance learning" method, most likely online delivery. Key training points are then reinforced through facilitated "in person" discussions-creating a unique blended use of technology and in person delivery.

The local facilitators are field trainers from the Academic Partnership.

The 2013 trauma Lunch and Learn is titled, *Taking It Back to Work; Managing the Effects of Trauma for Kids and Families*.

The first session occurred on May 28 in Area 1. 14 DCFS staff and five (5) field trainers participated while UAMS staff presented from Little Rock. Participant and trainer feedback indicates the session went well, although the presenter found it challenging when she could not see the reactions of the audience throughout the presentation. The development team plans to use an audience camera at the next session to help address this concern.

Future lunch and learn topics, using the above model, include:

- Taking it Back to Work: Trauma Informed Assessment
- Taking it Back to Work: Trauma Informed Therapies for Children

Content for these trainings is adapted from NCSTN resources.

Foster Parent Trauma Focused Training

UAMS has also provided trauma focused training to an estimated number of 120 Foster Parents at local conferences in Areas 1 and 7.

Next Steps

- Improve training delivery methods and implement first Lunch and Learn series (above) statewide. This includes preparation of field training staff prior to launch in August/September 2013.
- Begin development of second Lunch and Learn series for calendar year 2014.
- Continue assessment/development of Trauma focused training needs for foster/adoptive parent**s.**

Management Training - The Division does not yet have defined competencies for all supervisory/management positions in the Division. Many ODT trainings can be directly linked to several professional development topics relevant to child welfare. ODT staff has also agreed to strengthen our potential partnership by shadowing field staff to learn more about how to integrate child welfare issues into classroom discussions.

Mid/Upper Management Training-A Central Office workgroup has been established to develop competencies for mid/upper level management positions in the Division.

FY 2013 Update: As previously mentioned, several Area Directors have continued to coordinate local training events with ODT. Currently Area Directors have a specific interest in the ODT Performance Management Clinic. In keeping with ODT's commitment to work with DCFS, some adaptations have been made to help meet the needs expressed by Area Directors.

The Protective Services Manager and Administrative staff developed and provided an investigations training to investigative supervisors in the Fall of 2012. Provided at the Director's request (after a period of case reviews), this training focused on investigative procedures/policies and the critical thinking processes essential to supervising investigative cases.

Data management consultations for each Area have also been initiated by the Assistant Director and Director. Central Office Administrators and Program Managers meet with area supervisors to discuss the purpose and meaning of specific data reports in the daily management of Area/County performance. The QSPR, Meta-Analysis, and Quarterly Performance Report are examples of reports reviewed in these consultations.

The OJT program for new supervisors (previously mentioned) also contains skill development components from which experienced supervisors can benefit. These options will be explored in more detail in FY 2014.

While not considered a "formal" training, the AR CIRCLES project activities include leadership development opportunities for DCFS staff participating in Strategic Planning and implementation workgroups.

These include: Group process facilitation and management, increased awareness and use of implementations science principles, interpersonal skills, and work product development. See AR CIRCLES FY 2013 project updates in this report.

The Central Office workgroup for Mid/Upper Management Training identified 10 common duty areas from a review of functional job descriptions but has not yet developed a recommended "training path" or program for this audience.

The Supervisory Practice Model also provides additional information from which to build recommendations for Mid/Upper Management training in FY 14.

Fiscal Year 2012 Updates & Next Steps: Fiscal Years 2013/2014

New FSW Training

- Prepare proposed training outline/learning objectives for intermediate skill training.
- Write (DCFS approved) intermediate skill training materials.
- Pilot intermediate skill training

2012 Updates: The OJT manual for new FSWs has been reviewed and updated to reflect current DCFS policy requirements.

Intermediate Level Training for FSWs

Work on the development of an intermediate level training for Family Service Workers in the field 12-18 months has continued.

We received 11 completed training topic surveys and questioned the validity of the responses because the responses seemed focused on Central Office requests for information versus an assessment of skill development needs for FSWs.

Based on this, the Division decided to shift our approach and started an assessment based on a discussion of QSPR results related to case management practices on a statewide level.

Currently representatives from MidSOUTH and DCFS Exec Staff, including the QSPR Manager, have met to discuss what the components of an intermediate level training program should look like.

Activities include:

- Reviewed training content in a previous intermediate level training (referred to as "call back" training).
- Discussed the barriers encountered in implementing the previous model. The primary barrier was identified as the lack of DCFS staff participation/support. The subject of DCFS supervisors supporting an intermediate level training by sending staff as defined in the training program remains a concern.
- Reviewed and discussed practice issues noted in QSPR reviews during the last 3 years.
- Tentatively agreed family engagement is a component in all intermediate level training topics. In addition, substance abuse and domestic violence can be incorporated no matter what the training topic may be.
- Agreed to review and compare 200-300 FSW competencies series and to map those competencies to practice issues. A review template has been created to do this; however, the activity is yet not completed.

Next Steps 2013/2014

- Complete mapping/comparison exercise described above.
- Determine what the mapping exercise tells us.
- Re-affirm DCFS Leadership support and commitment to intermediate level skills training program.
- Determine best method of identifying training topics (if not already completed in mapping exercise).
- Determine impact, if at all, of the AR CIRCLES implementation efforts on this training development.
- Determine stakeholder feedback process.
- Determine supervisor and Area Director leadership roles in supporting training program objectives.
- Determine how to integrate or bridge the new worker training series with an intermediate level training series.
- Create proposed training outline and objectives for training program.
- Create training materials.
- Pilot training program.

FY 2013 Updates

Capacity issues have impacted amount of progress made on the Intermediate Level FSW training development. However, some progress has been made.

The following expands on 2012 updates and explains the current status of this effort.

The Quality Assurance Manager created a Practice Trends summary for workgroup members. This data was taken from QSPR reviews and related coaching sessions:

1. Substance Abuse
2. Family Engagement

3. Individualizing Services
4. Time Management/Prioritization
5. Caseworker Visitation

Substance abuse is a significant factor in a number of cases, and FSWs seem to find it challenging to address issues surrounding substance abuse. As a result, there appears to be a lot of "automatic decision-making" (e.g., parents tested positive for drugs, so they can't visit their children; drugs are involved so remove the children). From this description alone, engagement is a missing factor.

The Division Director has also noted the presence of substance use in many cases and has expressed an interest in seeing more case management related training on this topic for Division staff.

MidSOUTH has a purchased program from CWLA including training on case management skills specific to substance use as well as other mental health issues. This program can be easily (and fairly quickly) adapted to address Division needs. It also emphasizes engagement with the intended purpose of identifying protective factors and needs based on family input.

In addition to a prevalence of substance use in many cases, the Division and Assistant Director have noted the presence of domestic violence in many cases - specifically in child death reviews. A workgroup, facilitated by the Protective Services Program Manager, developed a *Domestic Violence Screening Tool* for FSWs.

The planning and development workgroup agreed the assessment tool, along with additional training related to domestic violence and child safety, is highly relevant to an intermediate level training program.

As already noted, family engagement seems to be the underlying theme when assessing practice trends highlighted in the case review process.

While FSWs do receive training related to family engagement in the New Staff Training series, the workgroup agreed this particular skill is best transferred into practice when a FSW has had the opportunity to gain additional work experience. The FSW is then "called back" after practicing in the field for 12 – 18 months to receive further training on interviewing skills intended to engage a family in a discussion versus simply telling a family what the process will be.

All FSWs, regardless of primary assignment areas, can benefit from additional training in effective interviewing strategies to promote engagement.

Competencies

The practice trends related to substance abuse and domestic violence are tied to 300 series competencies. Practice trends related to interviewing and engagement are tied to 200 series competencies.

Workgroup Recommendations

The following recommendations were approved by the Division Director and Assistant Director in April 2013.

- Approve identified Intermediate Level Training Topics-Substance Abuse, Domestic Violence and Interviewing Skills (engagement is a theme in all three topic areas).

- Secure Executive Staff approval of the proposed training program concept and Division commitment to implement and utilize the program for all FSW functions.
- Continue development (based on approval) of implementation strategies and training material development.
- Begin with Substance Abuse training materials as it requires less development time and is a CWLA program.
- Submit training materials and implementation strategy to Division for final approval.
- Implement program.

The above recommendations were approved, with concerns expressed about training fatigue and the anticipated impact of the IV-E Waiver on the implementation of a new training for FSWs.

These issues will be brought forward at the June 10th TSDT meeting as previously mentioned in the first section of the Training Plan updates.

<u>New FSW Supervisor Training</u>

- Identify field trainer skill sets necessary for providing quality field instruction to supervisors.
- Develop structured on-the-job training activities for new supervisors.

2012 Updates: In order to maintain focus on New FSW Supervisor training while the AR CIRCLES (MPCWIC Project) strategic planning work evolved, Division leadership established specific areas of focus between the two activities.

The AR CIRCLES Workgroup Strategic Plan(s) target the supervisor with one or more years of supervisory experience with DCFS.

The DCFS Professional Development Unit (PDU) and other Central Office staff have continued to work with the University Partnership on improvements to the New Supervisor training program for supervisors who are in the first year in a supervisory role.

- The Division has also requested the Partnership to begin the process of defining field trainer competencies necessary to support the development of child welfare supervisory skills.
  DCFS believes established competencies for field trainers supporting field staff (both supervisors and direct services staff) is one more alignment strengthening the competency based training model system.
  This expectation is now reflected in the 2013 contract program deliverables and has been discussed within our Training Skills and Development Team.
  In response to this request, the University of Arkansas at Fayetteville created a new role within the partnership structure to help support this and future training development work.
- The Partnership coordinators have also helped begin work on the development of a more formal training needs assessment for new DCFS supervisors. This work supports the development of the field trainer competencies and also assists in the development of structured OJT activities for supervisors attending New Supervisor training.

Next Steps 2013/2014

- Define Field Trainer competencies needed to train/support professional development of child welfare supervision.
- Identify trainings to support Field Trainer skill development.

FY 2013 Updates

Refer to previous updates regarding the Supervisory Practice Model, New Supervisor OJT Program, Supervisory Handbook, SDM Training for Supervisors, Field Trainer Competencies, and Supervisor Training Development as a part of AR CIRCLES second year implementation.

The Organizational Development and Training (ODT) unit has one trainer serving as a Learning Circle coach in Pulaski County. This opportunity is also helping him develop stronger insights related to the challenges faced by DCFS staff.

The ODT Manager has expressed continued interest in training Learning Circle Facilitator training for other divisions in the department. Learning Circle Facilitator training within the Division will be initially sustained by a DCFS team.

Next Steps 2013/2014

- Support development of Supervisory Practice Model and related materials. Completed FY13
- Coordinate review and/or development of supervisor training to align with the Supervisory Practice Model and/or Behavioral Indicators. Begin FY 14
- Develop sustainability plan for Facilitator training-identify Division trainers, develop training schedule with Butler Institute, assign training segments, and train assigned areas. Ultimately the last Facilitator training should be led of the DCFS training team versus Butler Institute.

FY 2013 AR CIRCLES Updates

The change management tool, *Learning Circles*, has been introduced (through three defined phases) to select county/central office teams across the state.

The Phase 3 LC teams include:

Implemented Learning Circles		
• Pulaski-Jacksonville	• Bradley	• Washington
• Pulaski North	• Calhoun	• Franklin
• Randolph	• Lawrence	• Lincoln/Cleveland
• Garland	• White	• Drew
• Saline	• Little River	• Hempstead
• Benton	• Central Office Eligibility Unit	• Central Office & Therapeutic Foster Home Providers

Implemented Learning Circles

- Area Director ands

County Supervisors

- Division Director and Executive Staff
- Assistant Director and Area Directors

Learning Circle participants have explored and/or implemented solutions to address topic areas such as these:

- Improved Client Services
- Teamwork/Communication
- Caseload Management
- Worker and Foster Parent Appreciation

In collaboration with UAF and UTA, Arkansas has also introduced an online Learning Circle tool. The vision for this tool is to connect Learning Circles statewide, enabling facilitators and members to share successes and challenges with other LC members resulting in further development of a learning organization.

Strategic Planning and Implementation Workgroups

The *Care * Commit * Connect* Strategic Planning workgroups, comprised of DCFS staff serving in a variety of positions, successfully completed the development of a *Supervisor Strategic Plan*. The strategic plan was presented to Executive staff in August 2012 and shared with statewide supervisors in September 2012.

The strategic plan focused on the continued development of strong leadership capacity and supports and is based on feedback provided by field staff and supervisors doing the work.

Using the Division's creed of *Care * Commit * Connect* the plan for year one targets the following areas:

- Hiring and Retention
- Supervisor and Worker Support (Appreciation & Recognition)
- Supervisor Practices and Policy (Supervisory Practice Model & Handbook)
- Internal Agency Communication
- Staff Meetings

Following the steps outlined in the Strategic Plan, six (6) of eight (8) *Implementation Workgroups* (*workgroup participants represent field, Central Office, Project Team members & Technical Consultants*) began the work of implementation.

AR CIRCLES Communication Workgroup: This workgroup successfully completed the development of an AR C.I.R.C.L.E.S communication plan. This plan provides guidance to Project Team members and Executive Staff for creating a feedback loop between the field and Central Office about Project accomplishments, progress (workgroup updates) and continuous growth based on feedback from staff.

In addition to the communication feedback loop, this workgroup also provided a blueprint for distributing project information via a dedicated email account. The account profile has been

created. However, the profile does not contain the requested permissions to allow project members use of the account. This is currently being addressed.

Supervisory Practice Model Workgroup: Facilitated by a consultant from APHSA, this workgroup completed the development of the first ever DCFS Supervisory Practice Model. As previously mentioned, the SPM aligns with the Division's Practice Model Goals and Principles by targeting all levels of supervision and supporting the development of consistent quality in supervisory practices.

Here are a few of the positive comments from supervisors and managers across the state.

- As a new supervisor this gives me a road map to do what I need to do.
- This is a good tool if you use it.
- It keeps you anchored and focused.
- It's ground breaking.
- This helps bring different county offices together and on the same page with supervision.

Staff Appreciation and Recognition Workgroup: Guided by a strong desire to develop a fair and consistent Appreciation and Recognition program, this workgroup, with help from an APHSA representative, created a program structure and supervisor resources for DCFS staff. Resource materials will be incorporated in the Supervisory Handbook.

Hiring Workgroup: This workgroup is focused on ways to streamline the DCFS hiring process for the Family Service Worker position. Using the belief *"If we are more thoughtful and deliberate about the way we select our workers, the better the chances we have of retaining them."*

Activities completed by this workgroup include:

- Exploring/researching child welfare hiring practices in other states.
- Compiling and reviewing interview questions used in all ten (10) DCFS Areas.
- Reviewing samples of functional job descriptions for the FSW position.
- Creating a list of competency driven interview questions.
- Selecting a production vendor to film a Realistic Job Preview Video
- Reviewing a proposed script for the video.
- Selecting staff to participate in the filming process.
- Scheduling a filming date in mid-July.

Networking Support and Online Resources (NOW) Workgroup: Focused on the development of a responsive online community designed to connect DCFS staff with community stakeholders in a meaningful way, this workgroup's efforts are extensive and will continue into year two and three of implementation efforts.

The Communities of Support (CoS) online tool, developed by the Technology Manager with UAF, and in collaboration with UTA, has the capacity to grow and adapt as the workgroup's implementation efforts evolve.

Workgroup members have initiated the first in a series of stakeholder feedback meetings to help them determine the best strategies for marketing the use of CoS and the ultimate vision of creating and sustaining Communities of Support.

AR Staff Meetings Workgroup: This workgroup successfully completed the development of supervisor best practice guide for conducting effective staff meetings. The targeted goal is to establish an expectation that all supervisors will meet regularly with staff and the guide provides tips for planning and productive staff meetings.

Supervisory Handbook Workgroup: This workgroup successfully defined the initial chapters and related resources for a DCFS Supervisor Handbook.

Meant to be a guide and a single point of reference for all DCFS supervisors, the handbook supports better consistency in supervisory and leadership practices across the state.

Using an online survey to ask supervisors what they would find helpful in a handbook, the workgroup identified the following topics as the starting point:

1. Supervisory Practice Model (AR CIRCLES product)
2. Policy and Procedures
3. Supervisor Tip Sheets (AR CIRCLES products and other resources)
4. Guide to Hiring (AR CIRCLES product)
5. Forms
6. PPES
7. OJT/Training
8. Updated Resources/Federal Information
9. Reports
10. Quality Service Peer Review
11. Acronym Glossary
12. Extraordinary Circumstances
13. Area Director Forms
14. Self-Care
15. Travel Policy/Forms
16. Partnerships
17. Resource Directories
18. New Worker Checklist (AR CIRCLES product)
19. Learning Circles (AR CIRCLES product)
20. Permanency Round Tables

Continuing the focus on using technology to support easy access, the Technology Manager with UAF is designing an online handbook template using the same programming platform supporting the NOW Workgroup (CoS) and Learning Circles.

Chairs from the Hiring, NOW, Staff Meetings, Appreciation/Recognition and Supervisory Handbook workgroups will present their work products to Area Directors and Executive staff on June 19, 2013 and to all state supervisors at the July 19th Quarterly Supervisor meeting.

AR CIRCLES: Next Steps

- Presentation of workgroup products to Area Directors and Executive on June 19, 2013.
- Presentation of workgroup products to all state supervisors at the July 19, 2013 Quarterly Supervisors meeting.
- Presentation of workgroup products to Academic Partners at the July 26th Quarterly Partnership meeting.
- Implement workgroup products (exception of NOW workgroup) August 2013

- Finalize timeline plan for year 2 project goals (initiated May 22, 2013).
- Finalize sustainability plan for Learning Circle implementation.

New Mid/Upper Level Management Training

- Review functional job descriptions for identified positions.
- Determine if updates to functional job descriptions are needed.
- Develop competencies for identified positions.
- Group competencies into "New," "Intermediate," and "Advanced" levels.
- Identify other course topics.
- Identify ODT courses linked to above competencies.
- Define training program requirements.

2013 Update: Capacity issues have affected progress related to the development of a management training (as defined above) structure. As previously reported ten common duty areas have been identified across Mid/Upper Management positions.

- Next Steps 2013/2014
- Develop competencies for these common duties.
- Group competencies into "New," "Intermediate," and "Advanced" levels, if applicable.
- Identify related course topics-beginning with courses offered by ODT and/or University Partnership.
- Adapt, if necessary, planning process based on the development of a Supervisor Practice Model.
- Develop Management training program requirements.

Continuing Education

FY 2012 brings with it several new program initiatives requiring mandated training as well as "make up" training for initiatives started in FY 2011. Some of these programs include but are not limited to:

- Differential Response
- Subsidized Guardianship Program
- Structured Decision Making
- Permanency Values Training

The figure (next page) incorporates FY 2012/2013 proposed training improvement efforts into the new staff training model.

2012 Updates: Attendance to Structured Decision Making and the Permanency Values training for FY 12 has been provided in previous sections of this update.

The Division continues to explore how to best implement a Differential Response program in Arkansas and is currently assessing family engagement training models to use with this program launch.

Next Steps 2013/2014

- Identify and implement a Differential Response training model with selected "providers." Providers may be designated DCFS staff, community providers, and/or a combination of these resources.

The current Differential Response (DR) program is managed internally through Community Services. Program implementation, including training, has been developed and provided by the DR Program Manager.

The Division expects to have DR implemented on a statewide basis by the end of August 2013. The DR Program Manager has assumed the primary reporting role for purposes of the ASPR.

Future plans include improving the DR program training infrastructure by working collaboratively with internal stakeholders, PDU and possibly the Academic Partnership.

- Implement new Structured Decision Making trainings (previously reported).
- Identify supervisor continuing education training topics per AR CIRCLES implementation.

Projected Continuing Education Topics of Interest

- Family Group Decision Making (see below)
- IV-E Waiver Project (see below)
- Learning Circle Facilitator Training (initiated)
- Expanded Structured Decision Making (completed)
- Structured Decision Making Supervisor Training (initiated)
- Well-Being of Children Framework (Included in New Supervisor OJT activities)
- Concurrent Planning (currently under direction of Area Directors)

Note: Continuing Education is not reflected in the figure.

FY 2013 Updates

The NST for Program Assistants (PA) was restructured to allow greater flexibility among the PA population. Instead of providing the TOT for Active Parenting to all PAs, it is now offered as a stand-alone training at the end of NST for PAs.

These changes were made based on participant feedback (not all PAs provide Parent Education) and Division approval. PAs who ARE assigned Parent Education responsibilities can register for the independent training.

The extent to which the IV-E Waiver impacts NST and other training initiatives is still unknown. The TSDT meeting on June 10th begins the dialog between Division Waiver Workgroup members and Academic Partners responsible for the management of the training system.

The IV-E Waiver includes anticipated staff training for these new tools/practices:

1. CANS and FAST Assessment Tools and Best Practices
2. Team Decision Making
3. Parent Education and Support (changes the role of some Program Assistants to that of Parent Coach)
4. Permanency Round Tables (DCFS staff completed TOT late May 2013)
5. Relative Foster Homes (research of other relative care training programs currently underway).

The figure (next page) graphically depicts the work previously summarized using the new staff training model diagram. Refer to light blue **[green]** text boxes for current **FY 2013** updates.

Proposed NST Model
Fiscal Year 2012/2013

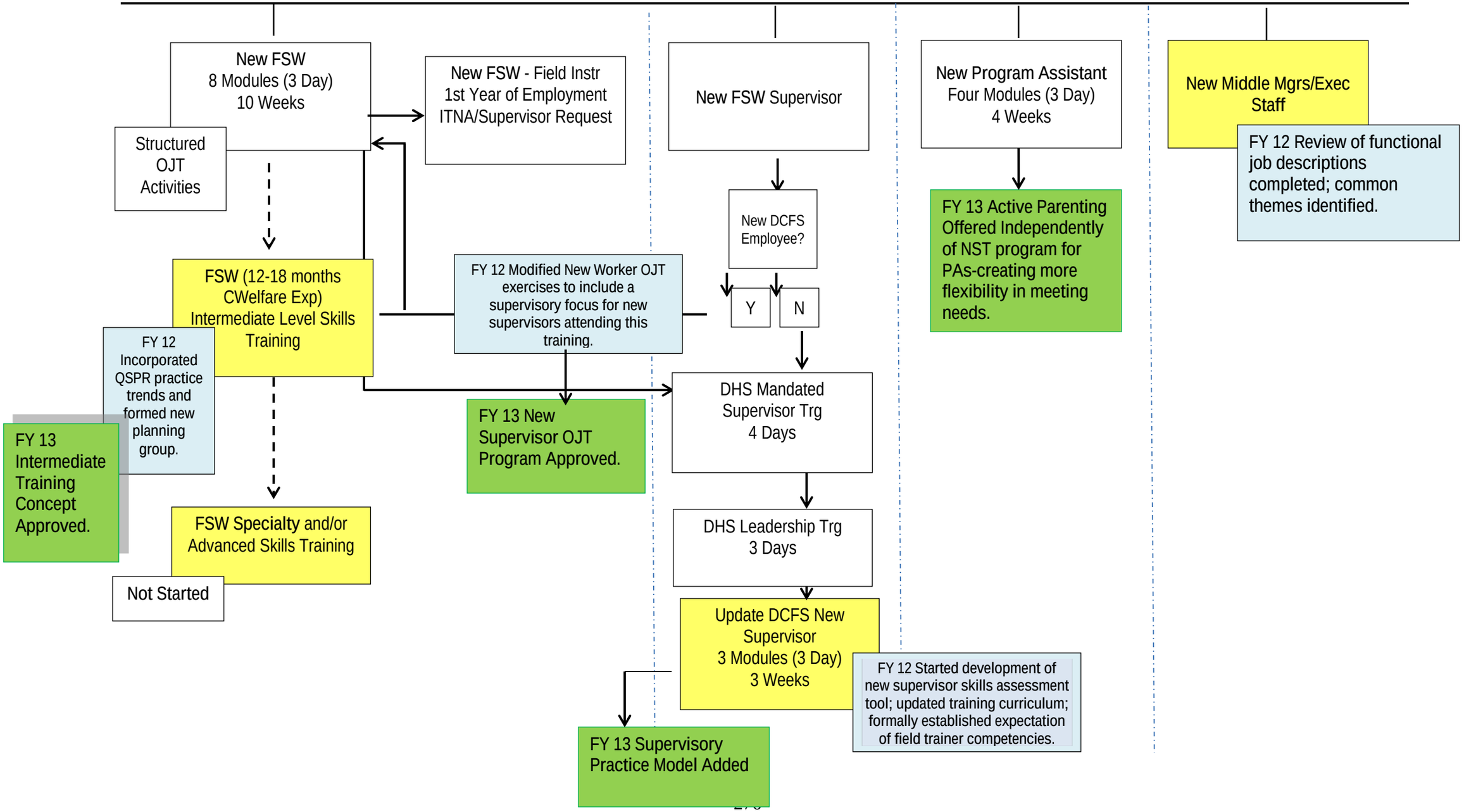

Training Overview

DCFS currently has nine (9) contracts with a number of universities known as the University Partnership. This group conducts the majority of DCFS professional development training.

The University Partnership also provides a system of educational support through "field trainers" who work directly in DCFS field offices on a variety of issues. As DCFS continues its review of the State's training system, the field trainers will continue providing support to new and experienced workers.

1. Maintaining the exchange of information between the Division and our training partners. Representatives from our training partnership are now engaged in a number of planning meetings and/or discussions in which they did not previously have the opportunity to participate. This includes participation in:
    a. Routine meetings with Executive Staff and CHRIS representatives.
    b. Conference calls and meetings with key Executive Staff members related to new initiatives and contract renewal issues.
    c. Central Office Area Director meetings - when appropriate.
    d. Quality assurance information exchanges related to COR and other reporting mechanisms.
    e. Presentations related to new tools the Division may be considering.
    f. Conference calls and meetings with other training professionals who are developing training programs outside of the partnership. This helps us ensure congruency of practice messages.
    g. Central Office participation in staff training events developed by training partners and other professional training entities.
    h. PDU participation in local training development meetings with the Area Director and university training coordinator.

The Division knows it wants field and classroom trainers to support the development of supervisory leadership skills in new and innovative ways. DCFS believes front line supervisors are the key to our success in changing practice behaviors across the state. Currently front line supervisory practices (from a system perspective) are a significant barrier to successfully implementing change in the system. While training alone does not address this issue in its entirety, it certainly supports the change effort.

- The FY2014 contract was updated to better reflect the work the Division has been asking of the University Partnership over the previous 3 years and included references to potential, upcoming IV-E Waiver activities and training.
- UAF has made some personnel reassignments in anticipation of responding proactively to our program improvement efforts.
- The University of Arkansas at Little Rock (UALR) continues to work with the Division on the implementation of the SAFE assessment process with foster and adoptive homes.

FY 2013 Update: In addition to the updates already provided in this report, other improvement efforts include:

- Confirming with CHRIS programmers it is possible to re-establish a file exchange between UAF and CHRIS, ensuring DCFS staff attendance is updated in the SACWIS.
- (UAF) Building a responsive web management system in support of Learning Circles, Communities of Support, future training initiatives, information exchange, custom reporting, and knowledge management processes.
  Features include:
  - Security that encrypts information being transmitted over the internet.
  - Memory to increase response time.
  - Storage space to support video and audio streaming.
  - Development client for testing new functionality and code upgrades.
- Utilizing the support of the training development role within the Academic Partnership to support field trainer development and resources. This role has produced to date:
  - Supervisory Trauma Informed training materials for field trainers.
  - Field Trainer's Guide to Coaching Learning Circles.
  - Partnership Desk Guide updates.
  - Coordination and development of New Supervisor OJT materials.
  - Coordination of the Field Trainer Competencies Development Project.
- Initiating the development of an orientation to DCFS for newly hired field trainers.

Projected Trainings

As the Division moves forward with the training review, DCFS will also continue to develop training strategies that support the Practice Model implementation and IV-E Waiver Strategies. These new training strategies will target:

1. Supervisory skills - best practices
2. Family engagement & case planning practices
3. CANS Assessment Tool
4. Team Decision Making
5. Nurturing Parent: Parent Education and Coaching Skills development.
6. Transitional planning with youth
7. Permanency values and planning
8. CHRIS enhancements related to above and other best practices
9. Central Office staff development

FY 2013 Update: Refer to previous sections and bolded items above.

As the Division continues work in the above areas, DCFS faces the challenge of shifting its own perceptions related to the role of training and the role(s) of accountability for worker performance.

In short, while training events may provide information necessary to transform practices, the actual change in practice on a local level is supported by the quality of front line supervisory response/support as staff seeks ways to incorporate classroom ideas into practice.

Current In-Service Training

New staff training (and related on-the-job activities) for family service workers and family service worker supervisors has been approved by the DCFS Executive Staff and is provided by UALR MidSOUTH Training Academy (classroom) and the IV-E Partners (on-the-job activities).

The curriculum is based on worker and supervisor competencies developed by the Institute for Human Services (IHS).

New Staff Training for Program Assistants (PAs) is currently based on a modified version of the Family Service Worker in-service training and does not have an on-the-job component.

When a new employee is hired, s/he is scheduled for training within the first two weeks of employment. Classes are held at one of five sites throughout the state, allowing the new worker closer access to both office and home.

New DCFS supervisors are expected to complete the Departmental (DHS) Supervisor training prior to attending additional training provided by MidSOUTH.

The DHS Leadership Series includes:

- DHS 4-Day Supervisor Training (with update training every 5 years) includes PPES, Administrative Policy, and EEO Laws. Hiring Procedures and Grievances, Cultural Diversity, and Interpersonal Communications.
- DHS Leadership in a High Performance Culture.

New Staff Training (provided by MidSOUTH) for DCFS supervisors maintains a focus on leadership skills within the context of child welfare and the administrative, educational, and supportive roles a supervisor plays which makes this program uniquely different than the DHS series.

FY 2013 Updates: 136 New DCFS field staff attended new staff training in FY 13. The following provides the details associated with this total:

- 105 Family Service Workers as of May 1, 2013.
- 13 Family Service Worker Supervisors as of May 1, 2013.
- 18 Program Assistants as of May 1, 2013.

An additional 44 FSWs are projected to begin NST in late June at three training academies.

An additional 11 PAs are currently in training.

A New Supervisor Training is also anticipated to begin in early July 2013.

New Staff Training Attendance/Exemption Procedures

DCFS Family Service Workers or Family Service Worker Supervisors returning to field work after a one (1) year break in service shall be interviewed by the Area Director to determine personal retention of best practice information and the policy/procedures related to their assigned roles in child welfare.

DCFS Family Service Workers or Family Service Worker Supervisors returning to the field within one (1) year of previous employment with the Division (in the same or similar job classification) are considered exempt from New Staff Training.

The hiring supervisor will develop a training plan with the field trainer to address any knowledge/skill areas s/he would like addressed with the returning employee.

If the employee or Area Director believes an exemption from training is justified based on completion of previous training and demonstrated competency, then a memorandum requesting an exemption is submitted to the Professional Development Unit for processing.

The request will include the following information:

1. Details of the previous DCFS trainings and/or other child welfare related trainings.
2. Date and time of the previous training and the relevance to current job duties.
3. Description of existing knowledge and skills related to job duties, including previous performance evaluations.
4. Copies of the training certificates or letter of attendance.

After review of this information, the Assistant Director of Community Services will notify the Professional Development Unit (PDU) of the decision.

The Professional Development Unit will notify the Area Director and MidSOUTH of the exemption disposition.

Actual credit hours will not be awarded to an employee who is exempted from a mandated training topic.

If, after granting an exemption for a class, the employee's skills are viewed as unacceptable, the employee will be required to attend the class for which exemption was awarded. Credit hours would then be awarded for completion of the attended training event.

DCFS Family Service Workers returning to field work in Family Service Extra Help positions will not be expected to attend the full New Staff Training series. The hiring DCFS Supervisor will assess the skills of the former Family Service Worker and will base his/her duty assignments on that person's assessed strengths.

2012 Updates: The above section has been edited for clarity and to better reflect the actual practices currently in place for training exemption requests.

The Division has also updated the above exemption section to address potential training needs of FSWs hired into "Extra Help" positions. Extra Help positions are temporary and can only be used for a period of six months. Typically the Division avoids hiring FSW personnel into these positions but this hiring practice does sometimes occur.

As DCFS implements the AR CIRCLES strategic plan, the Division may establish an orientation process requiring supervisors to provide updates to staff returning after a break in service.

New Worker Initial Caseload Assignments

Due to the intensity of the NST, on-the-job training requirements and local office workload capacity issues, caseload assignment decisions will be based on an incremental model.

This model supports skill development in such a way the worker is more prepared to accept full caseload responsibilities at the completion of NST.

Supervisors will make caseload assignment decisions by considering the following factors:

1. Type of family case.
2. Complexities surrounding the family issues (Example: Sexual Abuse, Chronic Neglect, and Failure to Thrive).
3. Current number of completed training modules.
4. Experience and skill at time of hire.
5. Local plan of support for the new worker, including IV-E partner contact and supervisory support.

Continuing Education Requirements

Employees of DCFS are mandated to attend a minimum number of job-related training each year.

In FY 2011 the Division rescinded the mandated "Worker Safety" training and have replaced it with annual training that focuses on helping field staff prevent/manage unsafe conditions through sound casework practices.

The new *Managing Difficult Encounters with Families* training allows each university partner to develop a section addressing specific issues for an Area while maintaining consistency statewide in other topics discussed in this class.

2012 Updates: As previously noted in this report, DCFS, with the support of the University Partnership, has continued its collaboration with UAMS on the Trauma Informed Workplace training initiative. The training presently being offered to field staff counts as the mandatory grief and loss training for the 2012 calendar year.

The Division and its partners will also create and offer a modified Trauma Focused training for supervisors who attended the Supervisor Trauma training offered in the last calendar year. This will count toward Grief and Loss training in calendar year 2012.

Next Steps 2013/2014

- Re-design a training program approved to meet the annual Grief and Loss one (1) hour training mandate. The Division would like this program to include multiple topic options that relate directly to service issues encountered by the field.
- This program may have on line training options available to staff in the future.

The following identifies the number of required continuing education hours based on the job function.

- Program staff (field staff with direct client contact and caseloads), Family Service Worker (FSW) classification, Area Managers - Twenty-four (24) annual hours required.
  The mandated annual trainings *Managing Difficult Encounters with Families and Trauma Informed Workforce* are applied to the above hours.
- Program Support staff (direct client contact with secondary case assignments or no caseload), Nurses, Health Service Workers, Health Service Specialists, Program Assistant, Transitional Youth Services Coordinator - Fifteen (15) annual hours required.
  The mandated annual trainings *Managing Difficult Encounters with Families and Trauma Informed Workforce* are applied to the above hours.
- Non-program staff (administrative support, office personnel, administration having no direct client contact [DCFS Central Office] including DCFS Executive Staff - Fifteen (15) annual hours required.
- Volunteers serving in a foster or adoptive care capacity for DCFS - Thirty **(30)** hours pre-approval and fifteen (15) annual hours required after the first year of approval.
  The above training hour requirement for adoptive homes stops upon completion of the adoptive process.
- Volunteers not serving in a foster or adoptive capacity, such as community volunteers or interns, are required to attend five (5) hours per year.
- All DCFS child welfare program field staff who have or may have contact with clients are required to maintain certification in first aid and CPR (infant, child and adult) provided at DCFS' expense through either the American Red Cross, American Heart Association, and the National Safety Council.

The time frame used to determine if the above requirements have been met is based on the calendar year.

Current Foster Parent Pre-Service Training

The state uses the Foster/Adopt PRIDE (Parents' Resource for Information, Development, and Education) training curriculum as the Foster Parent pre-service training program.

This curriculum was developed by the Child Welfare League of America.

FY 2013 Updates: The Division has created a Permanency Planning team. As a part of this team's efforts, research to determine an appropriate pre-service model for relative providers has been initiated. The PDU Manager is currently reviewing CWLA's *Information, Resources and Support for Kinship Families* course materials**.**

A. Foster Parent CPR Certification

All foster and adoptive parents are also required to be certified in First Aid and CPR. In addition, all homes are required to complete and maintain certification in First Aid, but only foster family (non-relative) homes are required to attend and maintain full certification covering infant-child-adult CPR.

Other homes, if only accepting fostering of relatives, are required to complete and maintain certification in the (categories listed below) for the ages of the children they accept.

1. Infant (birth through one (1) year of age).
2. Child (one (1) year through eight (8) years of age).
3. Adult (age eight (8) years of age through adulthood).

Acceptable national training providers include the following: American Red Cross (First Aid and CPR); American Heart Association (First Aid and CPR), and the National Safety Council (First Aid and CPR).

FY 2013 Update: Two new acceptable providers (the American Health and Safety Institute and EMS Safety Services) have been added to the list of acceptable providers in the Foster Parent Handbook (PUB-30).

The Division allows for foster or adoptive family members to receive certification using online training programs established by the above providers. This approval is based on the condition that the certification process includes in person demonstration of the learned skill in front of a certified instructor.

The foster parent must adhere to and be responsible for maintaining his/her certification requirements since various certification time frames occur with the acceptable CPR provider group (1 or 2 years),

Note: Foster parents must maintain certification in CPR and First Aid to remain opened as a DCFS foster home, but these training hours ***are not*** *used to meet the continuing education requirements outlined previously.*

DCFS is responsible for scheduling First Aid and CPR training for these homes. Foster/adoptive homes will be reimbursed for successful completion of classes scheduled through DCFS using in-house or approved training providers.

Central Office Staff Training

Each hiring supervisor reviews a new employee's skills and experiences to determine necessary training related to job functions. Both incumbent and new employees are evaluated through the annual PPES (Performance and Evaluation) process. Training issues may be addressed through development of individual training plans that target specific skill development.

DCFS Central Office employees are permitted to attend training found applicable to their job performance. Supervisors may use formal training events, as well as media such as videotape, CD, DVD, printed material or through interview/shadowing of a topic expert.

The Division expects more specificity for this training category as the training program review is completed.

Additional Training Opportunities

Additional training opportunities for DCFS employees and foster parents include attendance in training events offered by other state and local community providers.

Regular training conferences include:

- Arkansas Human Services Employees Conference (AHSEA)
- Annual State Foster Parent Conference (DCFS)
- MidSOUTH Summer School (MSSS)
- Annual Child Abuse and Neglect Conference (MidSOUTH)
- DCFS Area Training Meetings
- Academic Partnership Regional Training Conferences
- Mental Health Institute
- Court Appointed Special Advocates (CASA) Annual Conference
- Juvenile Justice and Delinquency Prevention Conference (Division of Youth Services)

Several of the larger state conferences provide a limited number of scholarships for DCFS staff and foster parents.

DCFS currently serves on many of the planning committees for the above events. Our future plans include expanding our involvement to include speaking at these events and/or offering workshops related to shared child welfare/practice issues.

The Division believes this type of direct involvement will strengthen our collaborative relationships with these community providers.

These providers include:

- Administrative Office of the Courts
- Child Care and Early Childhood Education & Child Care
- Local Provider Associations
- Juvenile Justice
- System of Care
- Other relevant providers

Training Records and Attendance Documentation

- All participation by DCFS staff and volunteers in Academic Partnership-sponsored training events are recorded in a training database maintained by the sponsoring institution.
- UAF is responsible for gathering attendance information from their seven sub-contracted university training partners and for maintaining a centralized training records database.
- All MidSOUTH training records are uploaded nightly to CHRIS. As previously mentioned, the UAF and CHRIS staff will re-establish a file exchange within the next 3-6 months.
- DCFS staff with a “supervisor” level of security may view and print employee training records from the CHRIS system.

- Central Office supervisory staff and Area Directors (or designees) will initiate and maintain a CFS-381 Employee Training Record for all employees. Supervisors will enter all attended training on the form and include copies of attendance verification within the folder.
- Area Directors (or designee) will enter all non-Partnership training attendance into CHRIS through the Training Toolbar function. Central Office supervisors (or designee) will likewise enter their employee's non-Partnership training into the CHRIS training database.
- Both MidSOUTH and the Academic Partnership will provide documentation of training attendance to participants in the form of a certificate, copy of the sign-in sheet or a letter of attendance.

Employee Career Advancement

The State personnel system no longer includes a career ladder incentive program (CLIP). This means employees wishing to advance into higher salaried positions must do so by following the established hiring process.

This process includes but is not limited to:

1. Submission of a formal employment application.
2. Met minimum qualifications for a position.
3. Met benchmarking standards (if applicable).
4. Interview
5. Selection

Stipend Program (BSW & Other Related Degrees)

The purpose of the DCFS Child Welfare Student Stipend Program is to hire more employees with degrees in social work and/or social work-related degrees.

DCFS Policy XI-C establishes guidelines for administering the DCFS Child Welfare Student Stipend Program.

University student stipend applicants first interview with the University IV-E Coordinator to determine if the student is a good candidate for the program. Applications and other related paperwork are submitted to the DCFS Professional Development Unit for review and processing.

Upon receipt of all record background checks and forms, the application packet is forwarded to the Division Director for approval.

If approved, students are awarded a two semester stipend (in most cases) in the applicant's senior year. Upon graduation, the student is hired by the Division in an IV-E allowable position and must remain (as a condition of the stipend agreement) employed for a minimum of one (1) year.

2012 Updates: The Division has clarified its messaging with prospective stipend students to help them better understand where they might expect to be placed upon graduation.

Even though the stipend application and agreement clearly state the student is agreeing to a placement based on the Division's current needs anywhere in the state, many graduating stipends have been upset to discover they are being asked to work in counties they prefer not to work.

The new message to interested students now clarifies that in all likelihood, placement decisions will be based on three (3) high turnover areas; Area 2, Area 1 and Area 8.

The Training Coordinator and PDU Manager also attended four (4) stipend interviews to observe the selection process. These interviews were conducted in Area 8, Area 6 and Area 5.

Next Steps 2013/2014

- Build on PDU involvement in the stipend interview process.
- Revise stipend application form to align with new messaging regarding placement probability in identified high turnover areas.

FY 2013 Updates: The Training Coordinator has increased efficiency in the background record checks processes and has developed/maintained follow up procedures with interns nearing the completion of their placement with DCFS. Conducting face-to-face interviews with exiting interns, PDU can now begin to make program improvements based on student feedback and follow up with county staff/Area Directors when appropriate.

PDU has recently developed an interim guide for a DCFS staff supporting students. This guide provides a baseline for additional program resource development in FY 14.

PDU has recently talked with the DHS Recruitment Manager about networking with more with Division staff on recruitment activities.

Next steps include but are not limited to:

- Providing contact information to both the DHS Recruitment Manager with the Area 2 Director. The Area Director has expressed interest in working more with our Departmental Recruitment efforts on college campuses in her Area.
- Coordinate Recruitment Presentation at July Area Director monthly meeting. Determine next steps.

Acceptable degrees for stipend applicants are identical to the minimum qualifications for employment as a DCFS Family Service Worker, which are the equivalent of a bachelor's degree in social work, sociology, psychology or a related field. Related fields are identified as:

- ✓ Child and Family Development
- ✓ Child Development
- ✓ Counseling (any field of Counseling)
- ✓ Family Development
- ✓ Family Services
- ✓ Human Development and Family Studies
- ✓ Human Services
- ✓ Rehabilitation Science
- ✓ Social Welfare
- ✓ Behavior Science
- ✓ Criminal Justice

- ✓ Education (Early Childhood, Elementary, Middle Level, Secondary, and Special Education)
- ✓ Home Economics/Family and Consumer Science

Master of Social Work (MSW) Educational Leave Program

The DCFS MSW Educational Leave Program helps the Division employ an increased number of persons who possess an MSW degree working in programs throughout the state.

DCFS Policy XI-B establishes guidelines for administering the DCFS MSW Educational Leave Program and addresses both full and part-time agreements.

Candidates must first gain acceptance from the University with an MSW Graduate Program before DCFS considers an application for this program.

In addition, an applicant must be a current employee with two (2) years of continuous service immediately prior to applying. Policy and the agreement mandate a work payback of two (2) months for every one (1) month spent in school.

In December 2009, DCFS had a first meeting with several employees who obtained an MSW degree through this program. This meeting helped begin the process of gathering feedback as the Division continues to look for ways to improve the effectiveness of this program.

The MSW program is currently under review by the Division. DCFS does not expect to seek applications for this program in FY 2012.

2012 Updates: The MSW program is currently under review by the Division. DCFS does not expect to seek applications for this program in FY 2013.

FY 2013 Update: The MSW program remains under review. DCFS do not expect to seek stipend applications in FY 2014. The Division is, however, accepting MSW intern placements where it can be supported by county staff.

Technical Assistance Plan

DATE REQUESTED	TA DESCRIPTION	NRC/Provider	APPROVED
7/1/12-1/1/14	**Differential Response**	**CASEY**	**Yes**
10/1/12-6/30/13	**Enhance Supervision**	**MPCWIC**	**Yes**
1/1/13-1/1/14	**Reducing number of children in Foster Care**	**CASEY**	**Yes**

Evaluation and Technical Assistance – SFY 2013

DCFS utilizes several strategies to assess the effectiveness of its staff, services, and programs as well as to ensure that those they lead to improved outcomes for children and families. DCFS develops a number of reports, evaluations and other mechanisms to measure the quality of its services. In particular, the Division makes concerted efforts to monitor its staff in relation to best case practice, and it identifies areas of strength in practice as well as areas needing improvement. Agency staff ensure that the development of any new reports or other methodologies are in line with CFSR benchmarks and the goals outlined in the Division's Program Improvement Plan (PIP).

An increasing number of the Division's reports are being built around the three core goals of child welfare—child safety, permanency and well-being—while also considering and accounting for other factors that might support or even impede these goals. Reports generally track performance over time, as well as compare performance to federal standards when applicable.

DCFS expects to continue utilizing its data in its efforts to connect its evaluations to performance and best case practice. The following list of reports and projects (and accompanying descriptions) accounts for the major quality assurance activities undertaken in Arkansas during SFY 2013:

Arkansas Supervisory Review Tool – On a quarterly basis, supervisors within each of DHS's 83 county offices review each active foster care and in-home case in their respective counties. The tool enables supervisors to complete their required quarterly review of all open cases in their respective counties, and supervisors must review 100 percent of their cases for a given quarter. The review provides supervisors with a one-on-one training tool to staff and discuss individual cases with caseworkers, including working with caseworkers on practice issues. The tool allows the supervisor to determine whether caseworkers know how to utilize best practice concepts; and if not, the supervisor can work with them on developing these skills. After all of the reviews have been completed for a given quarter, reports are generating offering case review information by county, area and statewide. Over the past year, DCFS supervisors completed 92 percent of their required reviews.

Family Preservation Services Evaluation – DCFS conducts this evaluation on an annual basis, in accordance with state law. The goal of family preservation services (FPS) is to keep families intact (prevent the removal of children from home) or achieve reunification expeditiously (if children are in foster care). This evaluation describes the proportion of families and children who need services; the proportion who subsequently receive services; and then tracks their progress at specific intervals after receiving those services. The report also examines the impact that services have in terms of preventing future involvement with the agency.

Compliance Outcome Report (COR) – The COR represents a monthly report that assesses the performance of DCFS caseworkers in divisional and regional areas. Specifically, the COR measures 35 indicators that represent standard casework or case-related activities, many of which must comply with state regulatory requirements.

Program Monitoring – Since SFY 2010 DCFS has been conducting contract monitoring reviews of many of its service providers. These reviews have been part of the Division's comprehensive effort to improve the quality of its service delivery system as well as the outcomes it achieves for children and families. During previous years DCFS has reviewed its

residential treatment facilities, therapeutic foster homes, sexual offender treatment programs, outpatient counseling agencies, intensive family service providers, and psychological evaluation providers. For SFY 2013, DCFS made a conscious effort to review (1) the performance of the state's Child Abuse Hotline, which is operated by and housed within the Arkansas State Police, as well as (2) its newly implemented and internally operated differential response (DR) program.

For its review of the Child Abuse Hotline, DCFS discovered that the Hotline generally does a good job of screening calls consistently and categorizing allegations accurately, all the while providing quality customer service. However, there were some noteworthy exceptions that the study was able to bring to light; and as a result, the recommendations that were made included enhancing the Hotline's internal quality assurance process and better prepare callers for the types of information that they will have to provide.

For its review of DR, a program intended to respond to maltreatment reports that allege traditionally low-risk allegations through a voluntary and family-led approach, DCFS found that the program—while taking less time to administer than a traditional investigation—is often not leading to the delivery of services to these families, since most families decline to participate. This information, in conjunction with other findings, will help the Division continue to shape and mold the program as it prepares to be implemented statewide in October 2013.

Quarterly Performance Report (QPR) – The Quarterly Performance Report (QPR) is a statistical report created for legislative committees dealing with the youth and children who are involved with DCFS. The report is completed quarterly for the state fiscal year and consists of three components: a compliance index, performance indicators, and a description of population and services.

Annual Report Card (ARC) – The Annual Report Card (ARC) is a statistical report that is also created for legislative committees dealing with youth and children involved with DCFS. The ARC is reported for each state fiscal year and is structured similar to the QPR. The report deals with the demographics of the population served by DCFS and documents any observable trends over time.

Meta-Analysis – As part of an effort to measure performance and outcomes on a localized basis, DCFS conducts an annual analysis of each of its ten Service Areas. As such, DCFS compiles, analyzes and reviews data regarding the children and families it serves within each Service Area, as well as measures the outcomes it achieves for the corresponding service population. Much like the federal Child and Family Services Review (CFSR), the primary issues on which this analysis focuses are safety, permanency and well-being; but it also places an emphasis on the personnel, contractual and foster care resources available to achieve these outcomes. The intent of these reports is to identify those practices and outcomes where each Service Area is producing well and can serve as a model for other Areas, as well as those practices and outcomes where each Area most needs to improve. At the conclusion of the ten Area-specific meta-analysis reports, DCFS also completes a statewide meta-analysis that measures DCFS' progress and overall transition over the most three recently completed calendar years. For SFY 2013, the Meta-Analysis reports continued to place a strong emphasis on performance at the county level for man of its measures. Focusing on local performance allows the Division to better identify and understand where casework is excelling and where improvement is needed.

Summary of Garrett's Law Referrals – On an annual basis, DCFS completes an analysis of Garrett's Law referrals received during the most recently completed state fiscal year. Garrett's Law refers to a bill enacted in 2005 that intended to address situations in which a mother gives birth to a child, and either the mother or the newborn is found to have an illegal substance in his or her system. According to the law, the presence of an illegal substance in either the mother or newborn is sufficient to substantiate an allegation of neglect. This study presents information on the Garrett's Law referrals received from SFY 2009 through SFY 2012. The report presents information regarding the number of Garrett's Law referrals received annually; the types of drugs cited in these referrals; how DCFS responds to Garrett's Law referrals; and whether the parents involved in these referrals receive any type of treatment.

Adoption Matching Website – During SFY 2013, DCFS finalized the adoption matching web site, a tool designed to help agency staff identify available pre-adoptive homes whose child preferences match those of children who are available for and have a goal of adoption. Those using the website will input the characteristics of a given child, and the website will cross reference it with the preferences of pre-adoptive homes. Adoptions staff statewide have been trained on how to use the website over the past year.

Foster Parent Matching Website – During SFY 2013, DCFS also finalized the foster parent matching website, a tool designed to help agency staff efficiently identify available foster homes whose child preferences match those of the criteria entered in by the user. The goal of this website is not only to find a foster family willing to accept a given child, but also to find a foster home in close proximity of the child's home county to ensure that the child can preserve his or her connections to the local community, school, neighborhood, family and friends. In other words, it filters matches by identifying foster homes within a certain search radius of the foster child's county of origin.

Tribal Coordination/Consultation:

Another area where we are focusing on developing a stronger collaboration or partnership with is the Tribal agencies. Although Arkansas does not have any recognized tribes, we are very interested and will develop strategies to improve our collaboration with the tribes. We have several border counties that do have a need at times to work with tribes and by learning and understanding more about their culture and needs, this will improve our assessment and decisions when working with families who are Native American.

We do have children in foster that are referred to the Tribal Nation for consideration of intervention, placement and case management. Our SACWIS system does have an element where we can document this information, but documentation is inconsistent as is tracking of this item. OCC attorneys regularly consult with the Tribal representative on all open ICWA cases. These same OCC attorneys provide notices as required by ICWA and has ongoing communications with the Tribal representative as the case progresses. Generally, when notified, the Tribal representative participated in hearings and staffing of these children and identified placement although the placement option was not always utilized. None of them moved to transfer to the tribal court. At the present time Arkansas does not have any IV-E agreements with any Tribal Nations.

Currently, CHRIS reflects **76** children who are identified as American Indian and Alaskan Native (AIAN). Of this number, 49 children enter care between July 1, 2012-June 30, 2013. Some of the Tribes represented in the number of children entering care were: Cherokee Nation of Oklahoma,

Winnebago Tribe of Nebraska, Oglala Sioux Tribe, Cheyenne and Arapaho Tribes of Oklahoma, and Choctaw Nation of Oklahoma.

Since OCC currently takes the lead on notifications they try to have annual update training on ICWA. We have the PowerPoint and training manual available for review on-site.

Arkansas will assess and make necessary changes to better identify and track children to ensure timely notification of the Tribal Nation.

Below is an example of general case management practices that have identified a child with Native American heritage:

In order to identify children with Native American Heritage, staff question parents at the time of custody and/or during probable cause and adjudication hearings. Once information is provided by the parent or caregiver that the child is of Native American heritage, our legal department is notified. When the child is identified as a member of a tribe, the tribal nation liaison will either intervene in the case or attend court to observe.

In Northwest Arkansas almost all foster children involved with ICWA cases area identified as part of the Cherokee Nation, so generally staff would work with one particular liaison that represents that tribe.

Examples of case management activities would be:

- providing updates and/or notifications on placement moves
- providing incident reports involving the child
- notifying notifications to court hearings of case plan staff meetings, mediations
- providing a schedule of parent/child visits
- coordinating contact between the tribal nation liaison and the child

The liaison case activities may include:

- attending court hearings
- ensuring that legal language is in court orders
- recommending services/placements specifically for Native American children
- observing court
- transporting parents to court
- providing parents various contact information
- advocating for the child to be adopted by a tribal member

Northwest Arkansas has several ICPC cases that involve children with Native American Heritage. The ICPC FSW communicates one-to-one with the tribal nation liaison. It appears to be a good working relationship as any differences of opinions are generally resolved.

Next Steps: In FY 2014 the DCFS director will be contacting each of the tribes' directors that are represented within the foster care population and begin the conversation to develop a more intentional partnership with these tribes. This initial conversation will gather information from them on how they could provide consultation and coordination to Arkansas in regards for the Native American population.

Child Maltreatment Deaths

Arkansas receives information on child maltreatment fatalities through the referral of the child abuse and neglect hotline. There reports usually include referrals from mandated reporters such as law enforcement, medical examiners, members of child death review teams, Health Department, and etc. DCFS NCANDS data would include any referrals received from these reporting sources.

Arkansas Child Death Review Panel

During the 85th General Assembly Regular Session, 2005, an act to create the Arkansas Child Death Review Panel was approved. The Panel was designed to identify the cause of death of children under eighteen (18) years of age; and to reduce the incidence of injury and death to children by requiring a death review to be performed in all cases of unexpected deaths of children under eighteen (18) years of age. The Arkansas Child Death Review Panel supports the Arkansas Child Death Review Program and local child death review teams. They provide guidance, expertise, and consultation in analyzing and understanding the cause, trends, and system response to child fatalities. The panel is also responsible for making recommendations in law, policy, and practice to prevent child deaths in Arkansas.

One of the functions of the child death review panel is to advise the governor, legislature, state agencies and the public on changes in law, policy, and practice to prevent deaths to children. The ultimate goal is to improve the overall health and safety of Arkansas children. The panel members review child mortality data, child death review program reports, and local child death review team reports. Their objective is to identify the causes of unexpected child deaths of Arkansas children.

In 2011, the Arkansas Infant and Child Death Review Program was created. The Arkansas Department of Health currently funds a part –time director and full-time coordinator. The Arkansas Child Death Panel has approved standard operating procedures and a standard operating procedure manual. Arkansas currently has three local child death review team pilot sites. The pilot sites are Sebastian County, Washington County and the Conway, Faulkner, Perry County team. The review teams meet quarterly.

The State Review Panel and the local child death review teams consist of the representatives listed below:

- The state Medical Examiner's Office.
- A coroner who is registered with the National Board of Medico legal Death investigators.
- The Center for Health Statistics of the Department of Arkansas State Police.
- The Division of Children and Family Services of the Department of Human Services.
- The Crimes against Children Division of the Department of Arkansas State Police.
- The Arkansas Child Abuse/Rape/Domestic Violence Commission.
- A physician who specialize in child abuse.
- The College of Public Health at the University of Arkansas for Medical Services.
- The Office of the Prosecutor Coordinator.

The Arkansas Division of Children and Family Services (DCFS) reviews reports on all death from all causes of children with whom the agency has been involved in an way during the 12 months prior to the child's death. The review population is not limited to children who died

from abuse or neglect. However, the majority of the deaths received are called in to the hotline by a professional who is mandated by law to make a report to the hotline if the professional has reasonable cause to suspect a child has been abused/neglected or has died as a result of child abuse or neglect.

DCFS convenes the Child Death Review Committee after a child fatality of a child or sibling who was previously involved with the agency within the last 12 months. The committee reviews DCFS actions and prior involvement in order to make recommendations to improve child safety. The committee consists of representatives from policy, training/staff development, the field, Central Office and the Office of Chief Counsel as well as the Director. Through the Internal Death Review, the committee reviews the case in its entirety to identify potential issues of the case, including what DCFS did right and possibly wrong in each case. The cases are then provided to the External Child Death Review Committee for review. The Committee recommends to the Director appropriate actions as deemed necessary to protect other children in the home or to take other corrective actions.

The Director reviews the recommendations and assigns them to the appropriate staff within her administrative team for implementation. Upon approval and implementation of these recommendations, the Director, or her designee, reports the implementation of the recommended actions to the DCFS Executive Staff. In addition, DCFS policy and procedures are updated to reflect the changes. Once the local child death review teams are implemented statewide, the child fatalities meeting the statewide panel's criteria for review will be input into the Arkansas Child Death Review data system. The results and recommendations from the local child death review panels will be submitted to the appropriate committee members for follow up and implementation.

Last year, the Child Death Review committee made several policy and practice recommendations. The DCFS Master Policy has been updated to include the following changes: FSW's will address the issue of co-sleeping/safe sleep whenever there is a young child in the home. Upon assignment of investigations, the assessor will conduct a CHRIS check to review the family's prior involvement with DCFS, prior to initiating the investigation. Assessors are now required to visit the home of medically complex children or children born substance exposed, prior to the child being discharged from the hospital. A skeletal survey information sheet was created and distributed to all staff to assist with conducting physical abuse investigations. Additional training has been provided to improve the quality of the investigations and to ensure timely documentation and completion. There are two additional recommendations that are currently under review, the first one is to create a protocol for dealing with Domestic Violence situations and the second one is to revise the definition to include significant other. Once approved and implemented, the recommended items will help improve the quality of the investigations and services provided to all families in the state of Arkansas.

Greatest Risk population

Arkansas is very data driven (rich in data). We continually review compliance reports, QA reports, and trending report that assist us with determining who our greatest risk populations are and where they are located geographically.

In this review of various reports we are able to identify areas in which children are the most vulnerable for maltreatment. Some of the populations include:

- Garrett's Law report
  This report indicates by county the following:
  - Type of drug
  - Mom's age
  - Baby's age
  - Gestational age
  - Health problems
- Re-entry into Foster Care
  - This report indicates by county the percentage of children re-entering the system. An analysis is done to see what were the issues surrounding the initial removal, when children returned home and what were the issues with the subsequent re-entry into the system.

Other ways the Division uses to identify this population is through:

- Internal Child Death Staffing or Near Fatality Staffings
  - Through these staffings we are able to identify families that have a higher possibility for repeated abuse. Increased supports and visits to the home are often ways in which the Division addresses this specific population.

Young children, ages 0-4, and medically fragile and disabled children are the most vulnerable and at the highest risk to be either abused or neglected. A review of the Arkansas SFY 2013 fatality investigations yields the results below:

- Forty-four fatality investigations, 31 (70 percent) of the investigations involved children under the age of one.
- Four near fatality investigations, two of the investigations involved three month old children, and two involved children between sixteen and twenty-two months.
- Race of the children, twenty-eight White, thirteen African Americans, two Native Hawaiian and one Asian.
- Gender, twenty female and 24 males.

Criminal Background Checks:

DCFS has implemented the Adam Walsh Child Protection and Safety Act that outlines procedures for conducting criminal background checks of prospective foster care and adoptive parents. DCFS policy outlines procedures for child abuse neglect registry for prospective foster and adoptive parents as well as adult members of their household.

Transitional Services:

Chaffee Foster Care Independence Program (CFCIP) and ETV

The Division of Children and Family Services (DCFS) is the state agency with the responsibility and authority to administer, supervise and directly deliver or arrange for the delivery of the programs identified as the Chafee Foster Care Independence Program (CFCIP) and the Education and Training Vouchers (ETV).

In Arkansas, these programs are managed by the Transitional Youth Services (TYS) unit. Specific program components and descriptions are listed below:

Foster Care

Serves transition aged youth beginning at age 14 until their 18th birthday

- Self-Sufficiency Training (aka Life Skills Classes)
- Local Youth Advisory Board (YAB) meetings
- Tutoring
- Life Skills Assessment/Development of Transitional Plan
- Assistance with the college application process
- Assistance completing the FAFSA
- Assistance with processing the ETV application
- Laptop/ other Educational Supports
- Prepare youth to for Independent Living

Extended Foster Care

Serves transition aged young adults beginning at age 18 until their 21st birthday

- Self-Sufficiency Training (aka Life Skills Classes)
- Local Youth Advisory Board (YAB) meetings
- Tutoring
- Life Skills Assessment/Development of Transitional Plan
- Continued assistance with the college application process
- Continued assistance completing the FAFSA
- Continued assistance with processing the ETV application
- Laptop/ other Educational Supports
- Work with youth to find appropriate Independent Living Arrangement
- Assist youth with purchasing Dorm/Apartment Start-ups

** Note: Youth receiving the Education & Training Voucher (ETV) are eligible to receive the grant until the age of 23 if participating successfully in post-secondary training or educational programs – they cannot be on probationary status at age 21 to continue to receive ETV funding through the age of 23.*

Adoption or Guardianship Subsidy Care

Youth are eligible for this subsidy if they were in the foster care system and were adopted or Guardianship attained after the age of 16

- Self-Sufficiency Training (aka Life Skills Classes)
- Local Youth Advisory Board (YAB) meetings
- Tutoring
- Life Skills Assessment/Development of Transitional Plan
- Assistance with the college application process
- Assistance completing the FAFSA
- Assistance with processing the ETV application
- Laptop/ other Educational Supports

After-Care

This funding is available for transition aged young adults that left DCFS custody after the age of 18, youth must have been in-care at least 90 days prior to requesting after-care funding.

- Provides up to $2,000 in funding for youth that choose to emancipate from care.
- Funds can be requested in $500 increments and are paid directly to the vendor (i.e. landlord, insurance company, utility company etc.)

TYS PROGRAM OBJECTIVES

The primary objectives of TYS programming are to ensure that "normalcy" exists for transition aged youth while adhering to safety and focusing on the importance of permanency. The TYS unit will continue to focus on client specific/youth driven services that enable youth to play an active role in their successful transition to adulthood.

Engaging youth in the following topic areas as necessary will provide transition aged youth served by TYS with an opportunity to become self-sufficient, productive and healthy individuals:

Educational/Job Preparedness

Education and job preparedness must prepare youth for their emancipation. Authentic youth engagement is essential to identifying the appropriate programmatic options for transition aged youth. Once identified TYS staff will work with youth to accomplish their goals. All youth are encouraged to complete their high school diploma or receive their GED. Post-Secondary, Service programs and employment options are discussed during the transitional team meeting.

Secondary Education

- Work with youth served by the foster care system to ensure receipt of a High School Diploma or GED
  - Focusing on their proficiency in Math & Writing
  - Completing a Post-Secondary Education/ Vocational Training Plan

Post-Secondary Education

- Work with youth served by the foster care system to complete a Post-Secondary Degree program at a:
  - 4-Year Institution of Higher Education
  - 2-Year Institution of Higher Education

Service Oriented Programs

- Work with youth served by the foster care system to complete a Service Oriented Program at:
  - City Year
  - AmeriCorps
  - AmeriCorps NCCC
  - Job Corps

Completion of a Vocational degree program/Certification

- Work with youth to identify and complete a Vocational of Certification Program

- Certified Nursing Assistant (CNA)
- Medical Billing & Coding Tech
- Dental Assistant

Completion of a Technical degree program

- Work with youth to identify and complete a Technical degree Program
  - Computer engineering
  - Aerospace engineering
  - Hospitality Services Management

Permanency

We assist youth in forming positive connections with members of the community other than DCFS Staff. The message of permanent life-long connections must be communicated to agency staff as well as the youth served by the foster care system. The TYS unit has identified the following themes to share with our youth.

- Explain what permanency is and discuss its importance
- Provide youth with opportunities to connect with positive adults in their communities
- Assist youth with developing permanent family-like relationships
- Provide youth with knowledge of their Biological Family

Health & Wellness

Prior to youth emancipating it is imperative that they have access to a Comprehensive Health Insurance plan including Dental & Vision coverage. Transitional Youth Services will continue to explore various plans. Youth should also know who their Primary Care Physician (PCP) is. Additionally, youth should have a good understanding of how to schedule an appointment at their doctor's office, how to refill a prescription and other basic functions. The following topics should be discussed with youth as needed.

- Mental Health Provider (as necessary)
- Knowledge of Community Mental Health Centers (if indicated to support wellness)
- Community Drug and/or Alcohol Treatment (if indicated to support wellness)
- DDS involvement for Developmentally Delayed Youth and if the youth is at a level of impairment where they are likely to become endangered by exiting custody- involvement with Adult Protective Services.
- Public Guardian (Youth has to have mental incapacity to qualify)
- Additional supports should be identified for Parenting Teens that will allow them to address the infant's healthcare needs as well as their own.

Housing

Safe, affordable housing has to be in place for transition aged youth. TYS will continue to work with community stakeholders to develop additional housing options for this population. Prior to emancipating from care, staff should ensure youth have access to affordable, safe appropriate Housing or Living Arrangement

- Apartment

- Dorm
- Transitional Housing Options
- HUD Housing Voucher

Self-Sufficiency Skills

Self-Sufficiency skills are the tools necessary for transition aged youth to make a successful transition out of the foster care system. TYS will continue to work with community stakeholders to prepare youth for living independently. The following areas are addressed during life-skills training classes offered by the DCFS.

- Cooking
- Personal Hygiene
- Banking/Financial Literacy/Money Management
- Consumer Decision Making
- Problem Solving
- Health & Wellness
- Job/Career Preparedness
- Resume Creation
- Interviewing Skill set
- Social Skill Development
- Attitude/Personal Responsibility

Community, Culture & Social Life

A connection to positive youth and other adults in the community is of great importance for transition aged youth. Youth need to connect with others and should have a good understanding of the benefits of having a social life and participating in cultural activities. The TYS unit will continue to discuss the importance of community connections with our youth.

- Spiritual support/Church (if interested)
- Connected to a peer circle/group
- Registered to Vote (Civic Engagement)
- Member of a community organization, fraternal organization, social group, political or service group/organization

State & Local Youth Advisory Boards

The TYS unit works in partnership with the Arkansas Youth Advisory Board (YAB) to accomplish our youth engagement efforts. The state YAB meets once monthly on the 3rd Saturday of each month and provides DCFS with the youth perspective, share concerns of other youth in care and address any other business as set forth by the YAB President. Local YAB boards meet monthly (day varies by county or area) this meeting is facilitated by the state YAB member from that area and the Transitional Youth Services Coordinator.

The state YAB has continued to develop and evolve into a full-fledged board! The board has adopted Roberts Rules of Order when meeting and has finalized a constitution along with a mission statement to guide the efforts and focus their attention on their role with the agency.

The YAB identified 3 activities that they are involved with on behalf of transition aged youth. The YAB:

1. Provides Peer to Peer Support for other youth in care
2. Develops Training/Workshops/Conferences for transition aged youth
3. Provides guidance to DCFS staff on behalf of transition aged youth as it relates to policy, programs and normalcy.

Description of TYS Activities & Programs

The TYS unit is working in a coordinated manner to incorporate principles of "Authentic Youth Engagement" as we work to strengthen the relationship with the youth served by the foster care system. Authentic Youth Engagement consists of, creating an atmosphere and culture that allows youth to openly express their concerns and opinions to DCFS staff. The atmosphere must be conducive to the free flow of ideas and thoughts for our youth. Additionally, youth must feel that their voice has value and must be empowered to be actively engaged in the development of their transitional plan. In order to create programmatic options that will benefit our youth, we must continue to authentically engage our youth. The overall goal of this initiative is to impact the decision making of DCFS staff as it relates to transition aged youth. This level of engagement will benefit both the youth and agency.

Transitional Plan Development

The development of the Transitional Life plan may be the most important of all TYS activities. TYS will continue to communicate the importance of these plans being individual in nature; all plans contain similar items (i.e. housing, education, health, etc.) that are required by law as of 2009. This enabling legislation allows Juvenile Courts to retain jurisdiction after age 18 unless the youth refuses services. Currently, Transitional Life Plan requires documentation that the youth has been given information regarding their right to stay in foster care after reaching 18 for education, treatment, or work and specific programs and services, including but not be limited to the John H. Chafee Foster Care Independence Program and other transitional services. Further, the Transitional Life Plan seeks to empower the youth by assuring information regarding the youth's DCFS case, including his or her biological family, foster care placement history, tribal information (if applicable), sibling information, etc. has also been provided for to the youth. These meetings are one of the most important activities the TYS unit is involved with. These plans provide a true opportunity for youth engagement. The TYS unit will continue to monitor staff engagement during the development of the transitional plan.

DHS/DCFS is charged with assisting youth with:

- Completing applications for ARKids First, Medicaid, or assistance in obtaining other health insurance;
- Referrals to transitional housing, if available, or assistance in securing other housing;
- Assistance in obtaining employment or other financial support

Arkansas requires all foster youth to receive assistance in applying for admission to a college or university, or to a vocational training program, or another educational institution and in obtaining financial aid, when appropriate; as well as assistance in developing and maintaining relationships with adults who could serve as a Life-Connection.

Before closing a case for a youth in foster care that has reached 18 or older – the youth will have in their possession:

- Social security card;
- Certified birth certificate or verification of birth record, if available or should have been available to the department;
- Family photos in the possession of the department;
- Health Records
- Educational Records
- Credit Report

ETV

Youth in care, emancipated youth or youth that have entered Adoption or Guardianship may apply for assistance through the Educational Training Voucher (ETV) grant program. Arkansas canceled the contract with Orphans Foundation of America and currently manages this grant program. Youth, who apply and are deemed eligible for participation in the program, receive– up to $5000 annually. These funds are treated much like a "scholarship" and dispersed in $2,500 increments each Fall & Spring semester. Any remaining balance is returned to the youth. ETV can be utilized to pay for Summer school as long as the $5,000 limit is not exceeded in any calendar year. .

2012 - 2013 TYS Activities

Annual Teen Leadership Conference "YAB State"

Members of the YAB along with the DCFS and the Administrative Office of the Courts-Court Improvement Project hosted the annual "Teen Leadership" conference for transition age youth in foster care. The 2012conference was held at the Holiday Inn Presidential in Little Rock, Arkansas; about 100 youth were in attendance. The YAB, DCFS and AOC provided all of the workshops Youth navigated, employment, housing, education, financial literacy and other "obstacles" during Independent City. The YAB also had elections, a "Candidate's Panel" with youth in care to discuss how they would serve as "President" of the state YAB. The AOC held "focus groups" for youth in attendance. Youth participated in 2 days of professional workshops and general sessions designed to have them better prepared to emancipate from foster care. The following workshops were identified from the youth/adult partnership (planning committee) as beneficial for conference participants.

The following topics were presented by the YAB:

- ED[YOU]CATION!
- Independent City
- AOC Focus Groups

Winter Ball

The state YAB was unable to have the Winter Ball during the 2012 calendar year. Plans are being made to incorporate this event during the 2013 calendar year The YAB hopes to continue this relationship with Youth M.O.V.E AR to host subsequent Winter Ball events in the future.

PROGRAM COMPONENTS

ETV

Youth in care, youth that have aged out of care or that have entered Adoption or Guardianship may apply for educational assistance through the Educational Training Voucher (ETV) Grant program. Arkansas canceled the contract with Orphan Foundation of America (OFA) and currently manages this grant program. If the youth, applies and is deemed eligible for participation in the program, they receive up to $5,000 annually. These funds are dispersed in $2,500 increments each Fall & Spring semester. Any remaining balance is returned to the youth. ETV can be utilized to pay for Summer school as long as the $5,000 limit is not exceeded in any calendar year.

The TYS unit has begun to manage this grant and process this grant on behalf of the transition aged youth served by this unit We will continue our efforts to address higher education retention and graduation rates. Multiple community stakeholders have approached the TYS unit about mentoring our youth. Additional efforts have been made to connect our youth with "Student Support Services" on campus. The State Coordinator for the TYS unit attends the Texas Reach conference—an initiative to bring Higher Education and Child Welfare together to discuss strategies to support transition aged youth.

NYTD

DCFS has continued to participate in the National Youth in Transition Database (NYTD) collection efforts for the purposes of determining the impact of the programs, services and supports offered to transition aged youth by DCFS and its stakeholders. The Division is currently pondering discontinuing our participation in NYTD. The financial penalty associated with noncompliance is a major factor for the agency to consider. Many youth that emancipate simply do not want to be contacted—as a result the agency faces a financial penalty for a survey that youth are not mandated or required to participate in. It may be more advantageous for the state to focus on our own internal process for gleaning information about this population and simply deal with the financial penalty; as opposed to utilizing scarce resources in an effort to "search" for youth that do not want to be contacted by the agency.

In 2012 DCFS sent representatives including the YAB President, SACWIS Administrator and the State Coordinator for TYS to the annual NYTD conference held in Washington DC.

NYTD Tech Support Group

1) Identify all Transition aged youth
2) Capture essential contact information
3) Track the independent living services (including educational aids) that are provided to youth.
4) Develop outcome measures that can be used to assess performance. The Fern cliff group was asked to consider survey design, data elements, youth involvement and youth reporting.

NYTD was implemented before 10/1/2010 with tracking/ monitoring tools along with worker alerts in place. Our belief that the more difficult aspects of keeping contact with emancipated youth remains true and continues to present challenges. DCFS has added incentives to encourage youth participation. 3 Amazon gift cards with $50 value were purchased—a drawing will be held from the list of NYTD participants. It is unclear whether this incentive increased

participation rates in NYTD. No additional marketing materials will be created, until the agency determines whether or not to continue to participate in NYTD.

Transitional Housing

The TYS unit will continue to work with external stakeholders to address the needs of transition aged youth. These stakeholders include; Housing Authorities, members of the Faith-Based community, Rehabilitative Services and other service agencies that have not traditionally been involved with Child Welfare in the past. Community members play a major role in the successful transition out of care for our youth. Housing and other support and case-management services for youth up to age 21 have to be are addressed—community stakeholders play a vital role in providing these services.

A transitional housing meeting was hosted for community stakeholders in 2012. The meeting was facilitated by Mark Kroner, with Lighthouse Youth Services out of Cincinnati, OH. The convening was sponsored by the Butler Family Fund. About 30 individuals from various organizations participated. Several transition homes have been opened since the meeting commenced. TYS will continue to work with external stakeholders to address the housing needs of transition aged youth.

DCFS is currently finalizing our list of approved transitional homes in an effort to begin receiving IV-E funds for this population. The 2010 Fostering Connections legislation will assist us with providing adequate housing options for transition aged youth throughout the state.

The State Coordinator for Transitional Youth Services is also serving on the Licensing & Regulations—Sub-Committee on Independent Living. This group is creating the regulations and determining what the Independent Living should look like in Arkansas.

DCFS is in the process of adopting or developing best and promising practices to ensure that the youth served by DCFS receive appropriate, consistent services that assist them gaining self-sufficiency.

We currently collect information or identify gaps in services and address them by utilizing the following programmatic components:

- Monthly YAB/ TYS Coordinator meetings
    - Meeting day was changed to Saturday in 2011
- Monthly TYS Coordinator Reports that include:
    - The number of youth on their caseloads
    - Services requested on behalf of their youth during the month
    - The Life Skills Classes offered for youth during the month
    - Housing situations for youth (Apartment, Dorm, APPLA, etc.)
    - The number of youth working
    - The number of youth in a post-secondary educational program
    - The number of youth on run status

Reports from Coordinators are examined every month and assessed individually to determine where gaps in services exist and to identify appropriate measures to address any gaps on the local level.

Other Initiatives

The System of Care in AR has included many transition aged youth for referral for Wrap-Around Services to assist with their transitional needs.

Transitional Youth Services is working to become an integrated part of the overall service delivery system – delivered directly or through collaborative efforts is critical to our programs success and our client's likely outcomes. TYS is excited about the participation in the Permanency Round Tables and Reunification efforts when feasible. These initiatives have the potential to make meaningful changes in the lives of transition aged young people—especially when working with youth whose parents rights have been terminated.

Strategies and programs that bring services and resources together from federal, state, and local governments as well as private sources assist greatly with promoting stability and success among foster youth. Indeed, services and resources relating or directed to youth transitioning out of foster care will be found in every program component of DCFS and with service partners that serve this population. Historically in Arkansas, traditional assessments and basic skills training – while critical components of a successful transition - fell short of fully engaging the system or the youth in the journey necessary to realize either's potential. Unfortunately, this continues to be the case, the agency will have to work with the YAB and other stakeholders to develop a curriculum that will prepare them for their emancipation from foster care.

Adoptions, Prevention Services, Child Protection Services along with the Foster Care unit will need to focus additional attention on this population. All DHS staff and external stakeholders are valued partners in engaging and empowering transition aged youth.

The TYS unit will continue to identify existing community resources that will support transition aged youth as they prepare for supportive independent living arrangements.

Community resources must support the individual needs of all transition aged youth including:

- Intellectually Disabled- Non DDS Waivers
- Teen Mothers
- LGBTQ
- Sexual Offenders
- Dual Custody (DYS)
- Homeless/Runaways

Further, modifications to existing TYS programs are required to strengthen the comprehensive nature of the necessary youth supports required to promote self-sufficiency and lead to a successful transition to independence. As with any youth served by the foster care system, involvement of the Primary Family Service Worker is essential. The transition planning process begins with the development of the youth's Transitional Life Plan; this plan is intended to be client focused /youth-driven. Youth must be actively engaged with the development of their Transitional Life Plan. TYS will continue to focus on active youth engagement by the Primary Family Service Worker during the transitional planning process. Clearly defined roles and responsibilities for those working with transition aged youth and participating in the transitional planning process will continue to be messaged throughout the state. All stakeholders including, Foster Parents, Group Home Staff, Family Service Workers, TYS Coordinators, and Teachers play a vital role in the development of the transitional plan.

Expanded expectations include specific activities by the custodian and staff with the youth detailed in a proposed youth's Transitional Life Plan. This plan is developed by the youth and

all stakeholders identified by the youth, this Transitional Life Plan outlines steps or tasks identified as supporting a successful transition to self-sufficiency. Concrete activities focused on the youth's overall well-being and life connections should be included in the Transitional Life Plan.

Transitional Life Plans address specific actions needed to assure the following needs are met:

- Future or current housing needs are met
- Educational or Training goals
- Employment (pre-employment training, job exploration, addressing barriers, etc.)
- Health Plans (including planning for insurance availability) for each youth is contained in their Transitional Life Plan.
- Life Connections or how the team plans to promote relationships or interactions with adults is a critical part of this Transitional Life Plan. and may include mentors, faith-based organizations, volunteers, relatives, etc. – but it will be an active part of the Life Plan and Case/Transitional Plan

The Transitional Life Plan as developed by the team of people identified by the youth including but not limited to the Primary Worker, AAL, CASA, foster parent, TYS Coordinator becomes part of the Case Plan after age 14 and before age 15 – or within 90 days of entering care if the youth is over 15 years old at entry. The Transitional Life Plan was passed into AR law during the 2009 legislative session and codifies the youth's involvement in the plan along with requirements that serve to inform and empower the youth (such as youth have all medical records, educational records, placement records, Birth Certificate, Social Security Card, State ID, family mementos, prior to their emancipation from care.

Future TYS Plans

The emphasis of this plan will focus on "re-vamping" the delivery, practice and engagement efforts of the Transitional Youth Services unit. TYS will work with internal and external stakeholders to achieve our objectives.

The following depict TYS initiatives for this year of this plan:

1. Ensure TYS is a youth-driven/client-focused practice that respects our youth and authentically engages them in the decision making process.
2. Focus on Normalcy for youth in care
3. Ensure all DCFS staff working with transition aged youth understand Permanency and actively work towards this goal for transition aged youth.
4. Develop additional transitional homes (independent living arrangements)
5. Implement Pulaski County Pilot Initiative (Specialized Family Service Worker unit—to work specifically with transition aged youth).
6. Continue to engage and support the YAB
7. Enhance Life Skills Trainings and further develop curriculum to meet the needs of transition aged youth
8. Analyze effectiveness of current TYS organizational structure
9. Continue to manage ETV program
10. Re-design of Aftercare services

One of the first of these initiatives is to ensure TYS is a youth-driven/client-focused practice that respects our youth and authentically engages them in the decision making process. This initiative is paramount to empowering our youth and preparing them to involve themselves in the decision-making process. Youth should be empowered to advocate, ask questions and truthfully communicate their desires to DCFS staff. The involvement of the Primary Family Service worker is needed to adequately serve transition aged youth.

"Normalcy" and "Well-being" for youth served by the foster care system are important components of the TYS program delivery system that cannot be overlooked. Youth served by systems typically experience age appropriate activities differently than their counterparts. The TYS unit wants to make sure that normalcy and well-being are not forgotten. Safety is of the upmost concern, but the TYS program should allow for age-appropriate activities, provide normalcy and adhere to the well-being of every youth served by this program.

The development of additional transitional homes (independent living arrangements) for transition aged youth will continue to be addressed. Foster homes and group home settings for the most part serve transition aged youth okay—but there are simply not enough homes to meet the needs of the DCFS population. TYS will continue to work with external community stakeholders to develop additional resources to address this gap in the service delivery system.

The TYS unit will work with internal stakeholders to implement a pilot initiative in Pulaski County, AR. It is my intention that this initiative is implemented prior to the end of the 2013 calendar year**.** This pilot aims to create a "Specialized Family Service Worker unit" This unit will work specifically with transition aged youth beginning at age 14. DCFS will monitor the progress of this unit and determine whether to expand the pilot to other areas of the state.

The TYS unit will continue to develop local and state level Youth Advisory Board (YAB) members. The YAB has made tremendous progress and will continue to be involved with policy changes, activities and programmatic planning efforts. The YAB will focus its efforts on making sure foster youth are aware of their advocacy efforts.

Life Skills Trainings for transition aged youth need to be ramped up for impact and usefulness. The TYS unit will work with the YAB and other stakeholders to identify the most appropriate manner to provide this training.

The TYS unit and state YAB are analyzing the impact of the current Aftercare services that exist for youth choosing to emancipate from care. The current structure does not adequately address the needs of transition aged youth that have chosen to leave care. Currently many youth choose to leave care at the age of 18 and immediately begin accessing aftercare funds—suggesting that an inadequate transition plan exist.

The current policy and practice will be discussed with internal stakeholders and the YAB to determine how this program should be administered in the future. Changes have already been made requiring the details of the "Exit Staffing" prior to processing After Care requests. Additionally, the TYS unit no longer processes consecutive requests as soon as youth emancipate (i.e. rent for January, February, March & April). We have identified that once the last "aftercare" payment is utilized many youth were unable to continue to live in the independent living arrangement (leading to homelessness in some instances). This speaks to youth being ill-prepared prior to their emancipation. It is our desire that youth are adequately prepared for their exit from care and aren't simply "placed" in an apartment prior to being adequately prepared.

Youth should be trained to utilize their aftercare funding as a "rainy day" fund, as suggested in DCFS policy. The TYS unit will continue to work with transition aged youth, DCFS staff and Attorney Ad Litems to message the "best way" to utilize their aftercare funding. DCFS leadership is also analyzing which vendors are considered "approved"—there has been a lack of clarity as it relates to processing payments for some aftercare youth requests (insurance payments—youth are being told that they had to have participated in the agency Insurance Program prior to leaving care in order to utilize aftercare funding).

TYS Coordinators & FSWs

Transitional Youth Services are currently available across the state for all age groups served by the TYS unit and will continue to be available. At least one TYS Coordinator is located in each of the 10 Areas of the state. The role of the TYS Coordinator will be addressed at some point. Coordinators have participated in numerous training programs during the 2012 calendar year and will continue to be trained on principles of "Authentic Youth Engagement" strategies. TYS Coordinators play a vital role in the lives of transition aged youth, additional training opportunities must and will be provided to this group.

TYS Coordinators currently, arrange for or deliver basic Life Skills Training classes, secure or assist with Life Skills Assessments, request funding for services, and arrange educational/training programs as appropriate. Coordinators in the past have also been charged with youth leadership development programming, community collaborative efforts and had a primary role in all client activities as a youth neared 18. As an age appropriate Transitional Life Plan is required for all youth in care after age 14 – the Coordinators role has changed.

During the implementation of the pilot initiative in Pulaski County—which will consist of creating a specialized Family Service Worker unit; this unit will work specifically with transition aged youth 14-21. The State Coordinator for TYS will work closely with the Area 6 Director-Supervisors and other local staff in the development and implementation of this pilot. This shift in practice should allow for more "teamwork" and for better coordination of services for transition aged youth. This FSW TYS unit will work closely with the TYS Coordinators to ensure sibling visits occur, youth needs are adequately addressed in a timely manner and in the development of transitional plans. Hopefully this pilot can be initiated prior to the end of the 2013 calendar year.

Public Awareness

Age appropriate planning and an accessible service delivery system are critically important to the success of Arkansas's transition aged youth. Increased public awareness, public forms of communication and social networking efforts were rolled out in a limited way. The TYS unit will focus on additional ways to connect to our transition age youth and engage the community when appropriate. One of the strategies to improve system access was the utilization of the Foster Club website—we no longer utilize this strategy. The TYS unit will continue to create and publish marketing materials (reference below) as needed to communicate transitional youth services to our clients and external stakeholders. The impact of this endeavor will be analyzed for effectiveness, but we should see an increased "awareness" of how the TYS program is designed to operate when engaging transition aged youth**.** DCFS will continue to make efforts as an agency to improve our communication and outreach efforts with this population.

Transitional Taskforce

A DHS Transitional Taskforce completed work to outline the steps required for enhanced Transitional Planning for transition aged youth that have involvement with multiple DHS agencies. A Memorandum of Understanding was approved at the DHS organizational level which included 5 Agency Directors. Other taskforce members included the Division for Developmentally Disabled Services; Division of Behavioral Health; Adult Protective Services, Office of Chief Counsel and the Division of Youth Services; Attorney Ad Litems and DCFS. DHS' program for Public Guardianships greatly enhances our agency's efforts at appropriate Life Planning with Connections for the most fragile and vulnerable of our population.

TYS Publications

The TYS unit developed several publications during the 2011 calendar year, including a brochure for the Extended Foster Care program explaining youth's ability to remain in care until 21. TYS is currently developing a practice guide, outlining practice tools and techniques to help staff develop youth-driven Transitional Life Plans and youth engagement techniques. Jonathan Dunkley, State Coordinator of transitional youth services developed "PAMELA's Guide to Transition" PAMELA is an acronym for Planning and Making Excellent Living Arrangements. This guide was developed in a comic book format and has replaced the "Be your Own Advocate" (Pub-50) transitional guide. Over 2,000 copies of this guide have been distributed to transition aged youth, the AOC, Attorney Ad Litems and agency staff. The TYS unit will continue to work with the YAB and other stakeholders to develop useful publications.

Transportation

Transportation for transition aged youth is a key barrier for not only youth in care, but anyone in this region of the country—without consistently available, affordable transportation. In some instances, bicycles have been requested to address this barrier, which works well for some (specifically those on college campuses). The TYS unit will work with the YAB to establish ways to address the barriers to transportation that currently exist.

Medicaid

DCFS had requested that the Medicaid state plan be amended to allow for youth aging out of foster care (with at least 90 days in care) to be eligible for Medicaid without regard of resources or income limitations. The TYS unit will continue to work for this amendment to the Medicaid state plan.

Further, DCFS has requested Medicaid income limits for youth over 16 years of age are raised to allow for student employment or participation in work programs/internships without losing eligibility. While budget constraints along with implementing key aspects of the Affordable Care Act, exist in AR the plan cannot be implemented at this present time. The new Health Care legislation on the Federal level will hopefully have a positive impact on the state's ability to address the needs of transition aged youth in the near future. Currently, all youth in care up to age18 are covered by Medicaid FC Category or ARKids Part B age 19 or over, other Medicaid categories or State General Revenue. Youth 18 to 19 years of age who have left care are generally eligible for ARKids Part B or some other Medicaid category. Youth who have left

care after age 18 have no generally available Medicaid category of eligibility available to them after age 19. Once key components of the new Health Care legislation are implemented, youth will be eligible for services until the age of 26.

Trust Funds

The Trust Fund is a treasury account that was to provide youth with financial and other appropriate support and services. For Arkansas, the trust fund program for youth receiving Transitional Services is referenced as the Educational Incentive Trust Fund for Post-Secondary Students. The fund was designed to provide an incentive savings account for students pursuing post-secondary educational goals upon successful completion of a semester as a full-time student with at least a C GPA.

- Youth serviced FFY 2007-2008 – 83 (Incentive accounts maintained or paid out)
- Beginning Balance Available 153,487
- Committed to Date - $152,500
- Current Available Funds - $987
- Expended to date $82,500
- Projected expenditures FFY 2008-2009 – $21,800

However, this Trust Fund Account, while the amount has been encumbered, has not been actively used as an incentive. There is no routine expiration of encumbrances, allowing accounts to languish. During FFY 2008-2009, only $4500 was actually claimed by 1 youth, leaving a balance of $148,987. Many of these encumbrances were established multiple years back and the whereabouts of the former youth are unknown.

Tribes

Arkansas has no federally recognized Tribes located in its borders. However, all surrounding states, except TN, have many. In Arkansas, if a youth is taken into custody and American Indian or Native American heritage is confirmed or suspected, OCC is immediately notified to ensure proper notification of the appropriate parties. All Chafee services and all other services in DCFS are available to American Indian youth on the same basis as other youth. Further, if the presence of a youth from a neighboring state's recognized tribe is made known to DCFS, services will be offered.

Training

Training will be incorporated with all DCFS staff and service providers, including New Worker training and New Supervisor Training that keeps the integrity of the Chafee goals and objectives, but seeks to move all youth toward a successful transition to adulthood by connecting all available services and community stakeholders to these youth. Youth development, new non-traditional partnerships, or any resource/service to support Transitional Life Plans while providing opportunities for positive permanency/life relationships and normalcy is our focus.

Youth involved with the local or State YAB are participating in training efforts with the State Coordinator of TYS and other stakeholders to develop as a board. Transitional Youth Services Coordinators continue to receive training in authentic youth engagement strategies, community development, skill development, organizational skills, advocacy, coaching techniques, etc. Training efforts have been expanded to include renewed sensitivity to the diversity of our youth

and young adults. Leadership training for teens is available for all older teens with the capacity to participate.

Youth are participating in training efforts to further their support available through efforts with the Courts, CASA, AAL's DCFS staff and Foster Parents during their respective conferences by offering youth-led workshops/panel discussions.

Specific training has taken place since 2011 on the proper utilization of Transitional Life Plans, the importance of Transitional Teams, new policies and forms in the CHRIS database for DCFS staff as well as local stakeholders. The service system changes continue to be incorporated into the practice model and practice. Supervisor and Manager Training continue to occur throughout the state with external stakeholders.

Arkansas is developing the policy and procedure to ensure that children receiving independent living services and/or education and training vouchers and those that are aging out of care have information and education about the importance of having a health care power of attorney, health care proxy, or public guardian as applicable.

The State Coordinator for TYS provides CFCIP training for all stakeholders including the Courts, CASA, AAL's, DCFS Staff and Foster Parents.

- In preceding years the State Coordinator has participated in CASA's annual conference along with the President of the Youth Advisory Board.
- The State Coordinator has presented at the annual AAL conference and discussed CFCIP, services provided for youth and principles of "Authentic Youth Engagement"

- The State Coordinator has met with and discussed the CFCIP program with several judges and the AOC since 2011 and will continue with these efforts as requested.

<u>Monthly Caseworker Visits</u>

Percentage of visits made on a monthly basis by caseworkers to children in foster care:

- FFY 2012: 77% compared to FFY 2011: 43%
  - Number of monthly visits made to children in the reporting population (Numerator) – 32,056
  - Number of such visits that would occur during the FFY if each such child were visited once per month while in care (Denominator) – 41,687

Percentage of visits that occurred in the residence of the child:

- FFY 2012: 93% compared to FFY 2011: 69%
  - Number of monthly visits made to children in the reporting population that occurred in the residence of the child (Numerator) – 29,711
  - Number of monthly visits made to the children in the reporting population (Denominator) – 32,056

The aggregate # of children in the data reporting population is: 6,088

Although we have made continual progress each year, AR continues to have challenges in regards to achieving the 90% threshold required for worker visits.

AR has utilized case worker visits funds to support the salary of caseworkers. In the past, we have purchased laptops for staff but this did not significantly improve the visits over the 2 year period that we provided them to the field. Some field staff still have access to laptops, but we have shifted laptops to supervisors since there were several challenges in regards to lack of utilization, lost or stolen, and sometime technology issues. AR continues to monitor and assess the quality of worker visits and have seen some improvement in some areas across the state. The Assistant Director for Community Services ensure that this is a topic for her monthly visits, monitors it through monthly reports, and assist with coverage during high turnover. The QSPR process continually focuses on worker visits and we have established messaging that children and families have better outcomes when the caseworker visits are consistent and high quality. AR utilizes several data reports for monitoring the worker visits which includes: COR report and 120 day worker visit report.

The caseworker visit funds were part of salaries to direct service staff to ensure activities are carried out. Although we have not seen a significant improvement in case worker visit percentage, there are some areas of the state that are showing incremental improvement. We plan to assess what strategies are working for them and share with other areas for consideration. We have a compliance outcome report that monitors compliance with the worker visits, but we utilize the annual QSPR to assess quality and quantity of visits based on the assessment of the family's need and safety management of children. Our intent is to continue with the implementation of our practice model framework which has an emphasis on family engagement, involvement, and visits with parents and children. With strategies in place to address these practices, we hope to see increase in the visits with families and children in their own homes. In addition the Assistant Director of Community Services has included this item as a priority area needing improvement for field. As she meets with the Area Directors and their staff she includes data specific to their area and county and ensures it's a part of the agenda and consultations. Arkansas has begun to see an upper trend in regards to monthly visits and as we continue to see the impact of this practice and engagement of family's outcome of Children and Families should improve.

- **Practice Model Message**: The goals and principles of the practice model serve as our baseline to reinforce the message of family preservation. In all practice model discussions with field staff and community partners, we will strongly advocate the need to consciously evaluate all casework activities with these principles in mind. We will use family visits as a consistent example for how the development of visit strategies can help families learn together and stay together safely.

- **Training and OJT**: We will evaluate all curriculum related to family visitation and ensure the practice model message is reinforced and applied in skill development activities, both in the classroom and on the job.

  Classroom activities could include role play, planning activities and brainstorming possible strategies that can be transferred into real casework activities.

  On the job activities include supervisory skill development for conducting family driven case reviews and staffing and one on one mentoring to improve caseworker practices.

- **Service Quality and Practice Improvement Teams**: Utilize Central Office quality review teams who:

- Review cases
- Measure quality of visits based on the Practice Model
- Debrief findings with local staff
- Develop improvement plans (with local staff at the time of review) to make specific improvements
- Use previous review findings to monitor level of change

DCFS Director conducts a meeting to review the findings of each Area's QSPR. The County Supervisors, Area Manager, relevant front line staff, QSPR manager, Planning Manager, and Assistant Director for Community Services participates in these meetings. Discussions include strengths, challenges, trends, innovative practices, and problem solving

Attachments

Cover Letter

Checklist

ETV statistical data

Training Matrix

Citizen Review Annual Report Area 1 & Response Letter

Citizen Review Annual Report Area 4 & Response Letter

Excel CFS-101 Part 1 Annual Budget Request for Title IV-B, Subpart 1&2 Funds, CAPTA, CFCIP, and ETV Fiscal Year 2014, October 1, 2013 through September 30, 2014.

Excel CFS -101 Part II: Annual Estimated Expenditure Summary of Child and Family Services October 1, 2013 through September 30, 2014

Excel CFS -101, Part III: Annual Expenditures for Title IV-B, subparts 1 & 2, Chafee Foster Care Independence (CFCIP) and Education and Training Voucher (ETV) : Fiscal Year 2011: October 1, 2010 through September 30, 2011

Financial Information comparing FY 2013 State expenditures against State expenditures under Title IV-B in 2005

PDF scan of all financial documents

The Arkansas Division of Children and Family Services did not hit the 20% of the IV-B Part II grant for adoption promotion and support services. The shortage in this line was made up through allocations of monies from the Social Services Block Grant and the Adoption Opportunities Grant which were utilized for these services and allowed us to re-allocate Title IV-B part II monies to Family Support Services, Preservation Services and Time Limited Reunification Services.

If you are interested in a copy of the attachments referenced above, please let us know via email at tyronza.hampton2@arkansas.gov.